TOOL HOLDERS

COLLETS AND FEED FINGERS

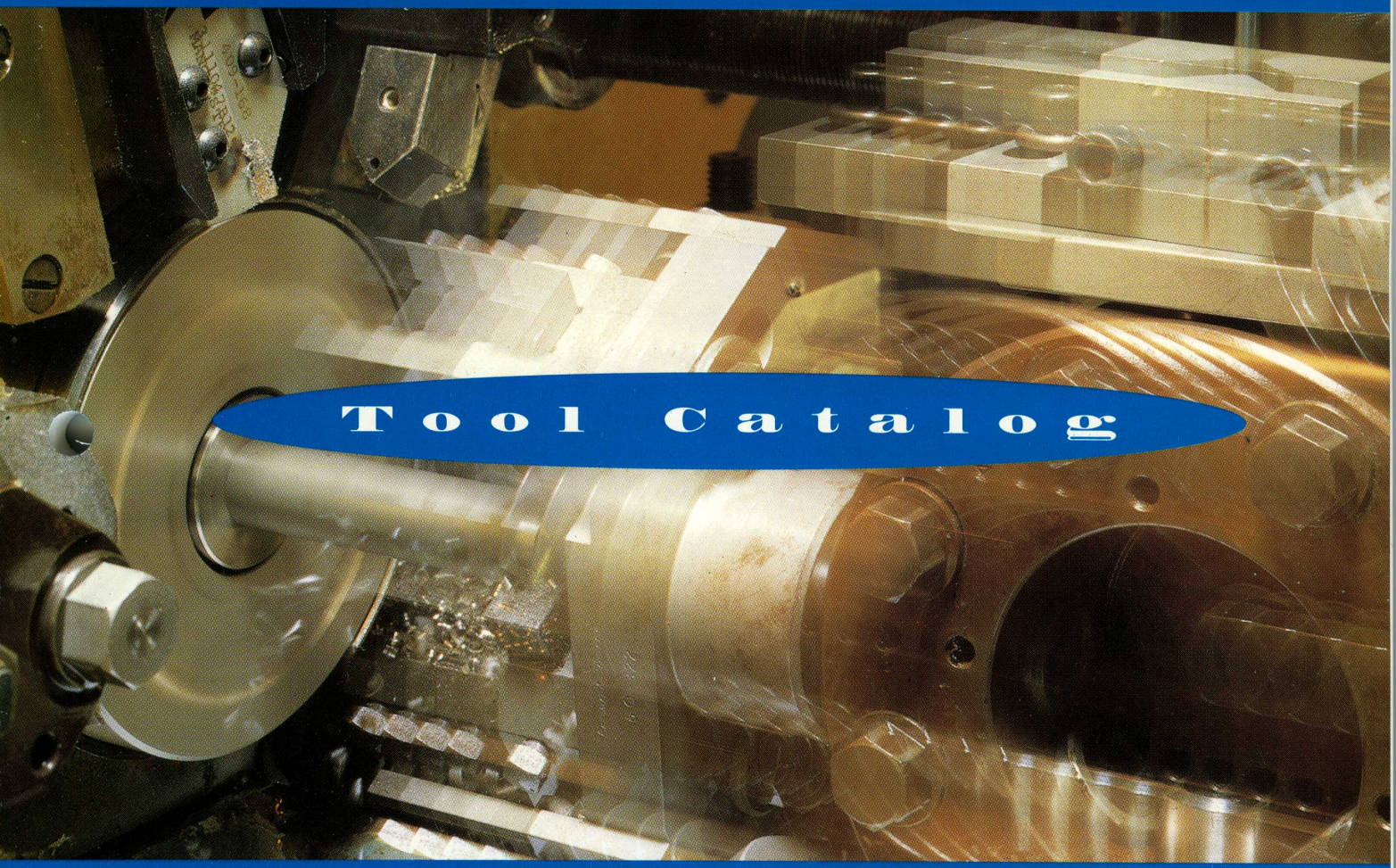

Tool Catalog

B&S SCREW MACHINE SERVICES INC.

B&S

Tool Holders, Collets and Feeding Fingers for Screw Machines

The high productivity features built into B & S Screw Machines can be obtained only by using the best tool holders available. Tool holders strong enough to absorb the high horsepower and torque of the screw machine spindle without twisting or deflecting are required to consistently produce close tolerance work at high production rates. Similarly, the collets, feeding fingers and associated equipment must run true and grip the stock firmly without slipping. Only the best quality spindle equipment should be used in screw machines doing close tolerance, high production jobs.

The tool holders, collets and feeding fingers described in this publication have been designed specifically for screw machines. Each tool holder is the most effective design for its particular application. Simple, practical design makes tool setting fast and accurate. Together with sufficient strength to hold consistent size under heavy loads, these designs allow the production of accurate work with a minimum of adjustments over sustained periods.

1995

B&S

© B & S Screw Machine Services Inc. All rights reserved.

ALPHABETICAL INDEX

Numerical Index: Pages 124 to 127

Description	Page
A	
Acorn Die Holders	60
Adapters	
Feeding Fingers	28
Split Bushings	100
Turret Tools	100
Adjustable Cam Holders	110
Adjustable Centering & Facing Tools	78
Adjustable Collet Holder	56
Adjustable Guides	94
Adjustable Hollow Mills	102
Adjustable Knurl Holders	86
Adjustable Revolving Stops	105
Adjustable Tap Holders	62
Adjustable Tool Holders	50
Adjustable "V" Tool Holders	64
B	
Back Rests	
for Swing Tools	92
for Turrets	98
for Adj. Hollow Mills	103
Balance Turning Tools	34, 39, 40
Blades	116-117
Blades,	
Recessing	96
Hollow Mill	103
Blanks	
Cams	109
Circular Pointing Tools	82
Collets	20
Books	123
Boring Tools	66-67
Boring Tool Holders	66
Box Tools	32, 34, 36
Brakes, Spindle	107
Burnishing Tools	104
Burnishing Tools,	
Rolls for	104
Burring Attachments	
Collets	13
Bushings	
Feed Tubes	30
Split Adapters	100
Tool Holders	115
Bushing Blanks	115

Description	Page
C	
Cam Blanks	109
Cam Holders	110
Cam & Lever Templates	111
Cam Rolls	114
Centering & Facing Tools	78
Centering Gage	108
Chamfering & Drilling Tools	48
Chuck Nuts	112
Chuck Sleeves	113
Circular Pitch Knurls	118-122
Circular Pointing Tool Blanks	82
Circular Tools,	
Tool Posts for	68
Closer for Die-Holders	60
Collets	
Blanks	20
Burring Attachment	13
Master Springs	13-20
Pads	13, 20
Springs	8, 12, 14
Stubs	9, 10, 14
Collet Holders,	
Adjustable	56
Combination Right and Left Hand	
Adjustable Centering	
& Facing Tools	78
Combination Right &	
Left Hand Knee Tools	76
Combination Roughing & Finishing	
Adjustable Hollow Mills	102
Cutting-off Tools	117
Cutting-off Tool Posts	70
D	
Diametral Pitch Knurls	118-122
Die Holders,	
Closer for Self-Opening	60
Releasing Acorn	60
Double Grip Collet Arr.	11
Drilling & Chamfering Tools	48
Drilling & Turning Tools	52

ALPHABETICAL INDEX

Numerical Index: Pages 124 to 127

Description	Page
E	
Extended Roll Holders	38
F	
Facing & Centering Tools	78
Feed Tube Bushings	30
Feeding Fingers	8, 21, 23
Feeding Finger Adapters	28
Feeding Finger Masters	22, 25
Feeding Finger Pads	26
Fixed & Adjustable Guides	94
Floating Reamer Holders	54
Forming Tool Holders	68
G	
Gage, Centering	108
Gage, Setting	36, 40
Guides,	
Fixed and Adjustable	94
H	
Holders	
Adjustable Collets	56
Adjustable Taps	62
Adjustable Tools	50
Adjustable "V" Tools	32
Boring Tools	66
Cams	109
Circular Tools	68
Collet Holders, Turret	56
Extended Rolls	38
Floating Reamers	54
Forming Tools	68
Interchangeable Heads	44
Knurls	44, 86, 88, 90
Pointing Tools	80, 82
Releasing Acorn Die	60
Thread Rolls	58
"V" Tools	64

Description	Page
K	
Knee Tools	76
Knurl Holders,	
Adjustable	86
Slide	44, 88
Swing	90
Knurls, Circular & Diametral Pitch	118-122
Knurling Data	118
Knurling Slide Tools	44
Knurling Swing Tools	90
M	
Master Collets & Pads	13, 20
Master Feeding Fingers	22, 25
Master Feeding Finger Pads	26
Mills, Adjustable Hollow	102
Miniature Floating Reamer Holders	54
Miniature Revolving Stock Stops	105
Miniature Tap Holders	62
N	
Numerical Index	124-127
Nylon Feeding Finger Pads	26
P	
Pads, Feeding Fingers	26
Pads, Master Collets	13, 20
Plain Hollow Mills	132
Pointing Tool Blanks	82
Pointing Tool Holders for Circular Tools	82
Pointing Tools with Carbide V Rests	80
Posts, Tool	
for Circular Tools	68
for Cutting off	70
for Extra-Wide Circular Tools	68
for Square Tools	72
Universal, for Square Tools	72
Publications	123

Description	Page
R	
Reamer Holders, Floating	54
Recessing Slide Tools	44
Recessing Swing Tools	92
Recessing Tools	92, 96
Releasing Acorn Die Holders	60
Rests, Back for Swing Tools	92
Rests, Back for Turrets	98
Revolving Stock Stops	105
Roll Holders, Thread	58
Roller Back Box Tools	34, 36
Roller Back Rests for Turrets	98
Rolls, Cam	114
Rolls, Straight	38
Rolls, Tapered	38
S	
Self-Opening Die Holders,	
Closers for	60
Setting Gage	36, 40
Side Knurl Holders for Cross Slides	44, 88
Sleeves, Chuck	113
Slide Tools, Turret	42
Slide Tools, Back Rest	92
Spindle Brakes	107
Split Bushing Adapters	100
Spring	
Collets	8, 12, 14
Ejector Stock Stops	106
Square Tools,	
Tool Posts for	72
Universal Tool Posts for	72
Steel Blades,	
High Speed	116
Stock Stops,	
Adjustable Revolving	105
Miniature Revolving	105
Spring Ejector	106
for Spring Collets	106
for Turrets	107
Straight Knurls	118-122

Description	Page
Stub Collets	9, 10, 14
Stub Collet Holders	56
Swing Tools,	
Back Rests for	92
Swing Tools, Knurling	90
Swing Tools, Recessing	92
T	
T Blades	117
Tables for Selecting Collets and Fingers	3-7
Tap Holders, Adjustable	62
Tap Holders, Miniature	62
Templates, Cam	111
Templates, Lever	111
Thread Roll Holders	58
Tool Bits, Turning Blades	116
Tool Centering Gage	108
Tool Posts	
Cutting-off	70
for Circular Tools	68
for Extra-Wide Circular Tools	68
for Square Tools	72
Trepanning Tools	84
Turning Blades	116, 117
Turning Tools,	
Balance	44
Turrets,	
Roller Back Rests for	98
V Back Rests for	98
Turret Tool Adapters	100
U	
Universal Cutting-off Tool Posts	72
V	
V Back Rests for Swing Tool	92
V Back Rests for Turrets	98
V Tool Holders	64
Vertical Slide Tool Holder	74

MACHINES USING BROWN & SHARPE TURRET TOOLS

For All Your Machines
Standardize on B &S Tools

All B & S Hand and Automatic Screw Machines, TAR-M/S Turning Machines, CNC, and PTC

BSA * (see also National Acme)

#48	5/8"
#68L	3/4"
#88L	3/4"
98AL & BL	1"
138AL & BL	1"
168 AL & BL	1"

* Also uses B&S Collets

Bardons & Oliver

#1 Turret Lathe	1"
#2 Turret Lathe	1-1/4"
#3 Turret Lathe	1-1/2"
#4 Turret Lathe	1-3/4"
#7 Turret Lathe	2"
#21 Turret Lathe	2-3/4"

Clausing

#7128 Bed Turret for 5900 Series Lathes	1"

Covel (see Wade)

F.W. Derbyshire

750 Bench Lathe	5/8"
"A" Bench Lathe	5/8"

Gisholt

#3 Ram Univ. Turret Lathe	1-1/2"
#4 Ram Univ. Turret Lathe	1-1/2"
#5 Ram Univ. Turret Lathe	1-3/4"

Hjorth

Bench Lathe (Optiona)	5/8" or 3/4"

Index (Also uses B&S Collets)

12	3/4"
18	3/4"
25	3/4"
24	1"
36	1"
52	1"

Jones & Lamson

#3 Ram Univ. Turret Lathe	1-1/2"
#4 Ram Univ. Turret Lathe	1-1/2"
#5 Ram Univ. Turret Lathe	2-5/8"

Leavitt

Mark I & Mark II	1-1/4"

Logan

#6530	1, 1-1/4 or 1-1/2" **
#2535-2-V	5/8 or 3/4" †
#2537-2-V	5/8 or 3/4" †
#2545-2-V	5/8 or 3/4" †
#2547-2-V	5/8 or 3/4" †
#1935-2	5/8 or 3/4" †
#1937-2	5/8 or 3/4" †
#1940-2	5/8 or 3/4" †
#1942-2	5/8 or 3/4" †
#1945-2	5/8 or 3/4" †
#1947-2	5/8 or 3/4" †
#1830-2	5/8 or 3/4" †
#1835-2	5/8 or 3/4" †
#1840-2	5/8 or 3/4" †
#1845-2	5/8 or 3/4" †

** Turret hole furnished 7/8"; customer to finish as required.

† Standard furnished 5/8" — 3/4" when specified.

Monarch

Model B "Speedi-Matic"	1"

National Acme * (see also BSA)

7/16" RA6	1"

* Also uses Cross Slide Holders.

Rivett *

Sixty Series	3/4" †

* Also uses Cross Slide Holders.

† 5/8" or 1" when specified.

Sheldon

3R Turret Lathe	1-1/2"
CR Auto. Chucking	1"
CM & HCM Hand Chucking	5/8"

South Bend

10" Turret Lathe	5/8" or 3/4" *
13" Turret Lathe	1"
2H" Turret Lathe	1-1/2"

Wade (Covel)

#7	3/4"
#73	3/4"
#94	5/8" or 3/4" *
#98	3/4" or 1" *

* Optional

Warner & Swasey

#1 Turret Lathe	3/4"
#2 Turret Lathe	1"

B&S

SELECTION TABLES: B & S PROGRAMMED TURNING MACHINES (PTC)

Machine Number	Serial No.	Adapter	Capacity Round Stock (Inches)	Double Grip Collet No.† (Stub Collets)	Single Grip Collet No. (Stub or Spring)	Feeding Finger Number
PTC32	550-2-101	22H-10	1/8 to 3/8	22	22	10
PTC32	550-2-101	22H-11AA	25/64 to 5/8	22	22	11AA
PTC32	550-2-101	22H-22	41/64 to 1	22	22	22
PTC32	550-2-101	22H	1-1/32 to 1-1/4	22	22 STUB 22C SPRING	22H
PTC42	550-2-101	22D-10	1/8 to 3/8	22	22	10
PTC42	550-2-101	22DD-11AA	25/64 to 5/8	22	22	11AA
PTC42	550-2-101	22DD-22	41/64 to 1	22	22	22
PTC42	550-2-101	22DD-22	1/32 to 1-1/4	22 22	22 STUB 22C SPRING	22H
PTC42	550-2-101	22DD-22D	1-5/16 to 1-1/2	22DS	22D	22D
PTC42	550-2-101		1-9/16 to 1-5/8	22DS	22D	22DD
PTC60	550-2-101	27-11A	33/64 to 5/8	22	22	11A or 11AA
PTC60	550-2-101	27-22	41/64 to 1	22	22	22
PTC60	550-2-101	27-22H	1-1/32 to 1-1/4	22	22 STUB 22C SPRING	22H
PTC60	550-2-101	27-22D	1-5/16 to 1-1/2	23S	22D	22D
PTC60	550-2-101	27-22DD	1-9/16 to 1-5/8	23S	22D	22DD
PTC60	550-2-101	27-23	1-11/16 to 2	23S	23S	23
PTC60	550-2-101		2-1/16 to 2-3/8	23S	23M	27

† Double Grip requires 2 Stub Collets — machine furnished with Chuck Nuts and Chuck Sleeves for Double Stub arrangement.

SELECTION TABLES: COLLETS AND FINGERS

Using Feed Tubes, Adapters, Chuck Nuts and Sleeves furnished with machines.

Note: if feed tube is not the original, measure overall length and call a tooling distributor

Machine No.	Starting With Serial No.	Capacity: Adapter *	Capacity: Round Stock (Inches)	Collet No.	Feeding Finger No.
00 Auto.					
00G Auto.			1/16 to 5/16	00	00
00 Auto. Scr. Thr'd.	Prior to 12852		21/64 to 3/8	00	00A
00 Auto.	12852 to 22023		1/16 to 3/8	10	10
00G Auto.	542-00-1 to 542-00-450		25/64 to 1/2	10	10A
Auto. Screw	500 to 649		1/16 to 3/8	10	10
Threading	Commencing 546-00-1		25/64 to 1/2	10	10A
00G Auto.			1/16 to 3/8	10	10
Screw Thr'd.	Commencing 12852		25/64 to 1/2	10	10A
00G Auto.	542-00-451				
	to 542-00-3299	10A-10	1/16 to 3/8	10	10
00 Hand	540-00-1	10A-10	1/16 to 3/8	10	10
		10A	25/64 to 1/2	10	10A
00G Auto.	544-00-5				
Cutting-Off	to 544-00-22	10A	25/64 to 1/2	10	10A
00 Auto	542-00-3300				
00 Auto. Forming					
and Cutting-Off	543-00-1	10A-10	1/16 to 1/8	10	10
with Turret		10A	25/64 to 1/2	10	10A
00 Auto. Forming					
and Cutting-Off	544-00-23				
00 Auto.		10AA-10	1/16 to 3/8	11	10
3/4" Capacity	542-00-6341	10AA-10A	25/64 to 1/2	11	10A
Spindle		---	33/64 to 3/4	11 Stub	10AA
		---	33/64 to 3/4	11C Spring	10AA
00 Ultramatic		10A-00	1/16 to 5/16	10	00
1/2" Capacity	542-00-6800	10A-10	1/16 to 3/8	10	10
Spindle		10A-10A	25/64 to 1/2	10	10A
00 Ultramatic	542-00-6800	10AA-10	1/16-1/2	11	10
3/4" Capacity Spin.		--	33/64	11	10AA
0 Auto.	Prior to 2015	20A-10	1/16 to 3/8	11	10
0G Auto.	Prior to 2215	---	25/64 to 1/2	11	11
0 Auto.	2015 to 8020 incl.	20A-10	1/16 to 3/8	11	10
		20A-10	1/16 to 3/8	11	10
0G Auto.	2215 to 8020 incl.	---	33/64 to 5/8	11	11A
0 Wire Feed	All Machines		1/16 to 3/8	10	10
	1504 to 2143 incl.		7/16 to 5/8	10B	11A
		20-10	1/8 to 3/8	11	10
0 Auto.	8021 to 15417	20-11A-11AA	25/64 to 5/8	11	11AA
0G Auto.	542-0-1 to 542-0-320	---	21/32 to 3/4	11C	21A

** Adapters shown come with machines and fit standard feed tubes. For other adapters, see page 28. Note: Spring and Stub Collets of the same designation are completely interchangeable. Different collet types may require different chuck sleeves and chuck nuts. A chart of chuck sleeves is shown on page 113.*

Using Feed Tubes, Adapters, Chuck Nuts and Sleeves furnished with machines.

Note: if feed tube is not the original, measure overall length and call a tooling distributor

Machine No.	Starting With Serial No.	Capacity: Adapter *	Capacity: Round Stock (Inches)	Collet No.	Feeding Finger No.
0 Hand	540-0-1	21A-10	1/16 to 3/8	11	10
		21A-11AA	25/64 to 5/8	11	11AA
		---	21/32 to 3/4	11C	21A
0G Auto.	542-0-321	21A-10	1/16 to 3/8	11	10
0G Auto.		21A-11AA	25/64 to 5/8	11	11AA
Cutting-Off	544-0-1	---	21/32 to 3/4	11C	21A
1 Wire Feed	227 to 1790 incl.	11-10	1/16 to 3/8	21	10
		11-11A-11AA	25/64 to 5/8	21	11AA
	1791 to 3024 incl.	20-10	1/16 to 3/8	21	10
		20-11A-11AA	25/64 to 5/8	21	11AA
	588 to 1715 incl.	---	21/32 to 3/4	21	21A
	1716 to 3024 incl.	---	21/32 to 7/8	21	12
2 Auto.	249 to 7351 incl.	22-10	1/8 to 3/8	22	10
		22-11A-11AA	25/64 to 5/8	22	11AA
		---	41/64 to 1	22	22
2G Auto.	2205 to 7351 incl.	---	1-1/16 to 1-1/8	22B	22A
2 Auto.	7352 to 14813	22-10	1/8 to 3/8	22	10
		22-11A-11AA	25/64 to 5/8	22	11AA
		---	41/64 to 1	22	22
2G Auto.	542-2-1 to 542-2-375	---	1-1/32 to 1-1/4	22C	22H
2G Auto. with 1-1/2" Capacity Spindle	9084 to 14813 542-2-1 to 542-2-3099	22D-10	1/8 to 3/8	22	10
		22D-11AA	25/64 to 5/8	22	11AA
		22D-22	41/64 to 1	22	22
		22D-22H	1-1/32 to 1-1/4	22C	22H
		---	1-5/16 to 1-1/2	22D	22D
2 Wire Feed	383 to 3565 incl.	22-10	1/8 to 3/8	22	10
		22-11A-11AA	25/64 to 5/8	22	11AA
		---	21/32 to 1	22	22
	864 to 2214 incl.	---	1-1/16 to 1-1/8	22B	22A
	2215 to 3565 incl.	---	1-1/32 to 1-1/4	22C	22H
2 Hand	540-2-1	22H-10	1/8 to 3/8	22	10
		22H-11AA	25/64 to 5/8	22	11AA
		22H-22	41/64 to 1	22	22
		22H	1-1/32 to 1-1/4	22C	22H
2G Auto.	544-2-4	2-22	41/64 to 1	22	22
Cutting-Off	to 544-2-12	22H	1-1/32 to 1-1/4	22C	22H
2G Auto.	542-2-376	22H-10	1/8 to 3/8	22	10
	to 542-2-3099	22H-11AA	25/64 to 5/8	22	11AA
2 Auto. with 3/4" Capacity Spindle	542-2-3100	21A-10	1/16 to 3/8	11	10
		21A-11AA	25/64 to 5/8	11	11AA
		---	41/64 to 3/4	11C	21A

** Adapters shown come with machines and fit standard feed tubes. For other adapters, see page 28. Note: Spring and Stub Collets of the same designation are completely interchangeable. Different collet types may require different chuck sleeves and chuck nuts. A chart of chuck sleeves is shown on page 113.*

SELECTION TABLES: COLLETS AND FINGERS

Using Feed Tubes, Adapters, Chuck Nuts and Sleeves furnished with machines.

Note: if feed tube is not the original, measure overall length and call a tooling distributor

Machine No.	Starting With Serial No.	Capacity		Collet No.	Feeding Finger No.
		Adapter *	Round Stock (Inches)		
2 Auto. with 1-1/4" Capacity Spindle	542-2-3100	22H-10	1/8 to 3/8	22	10
		22H-11AA	25/64 to 5/8	22	11AA
		22H-22	41/64 to 1	22	22
		22H	1-1/32 to 1-1/4	22C	22H
2 Auto. with 1-1/2" Capacity Spindle	542-2-3100	22D-10	1/8 to 3/8	22	10
		22D-11AA	25/64 to 5/8	22	11AA
		22D-22	41/64 to 1	22	22
		22D-22H	1-1/32 to 1-1/4	22C	22H
		---	1-5/16 to 1-1/2	22D	22D
2 Ultramatic 3/4" Capacity Spindle	542-2-5601	21A-10	1/16 to 3/8	11	10
		21A-11	25/64 to 1/2	11	11
		21A-11AA	33/64 to 5/8	11	11AA
		---	21/32 to 3/4	11	21A
2 Ultramatic 1-5/8" Capacity Spindle	542-2-5601	22DD-10	1/8 to 3/8	22	10
		22DD-11AA	25/64 to 5/8	22	11AA
		22DD-22	41/64 to 1	22	22
		22DD-22H	1-1/32 to 1-1/4	22 Stub	22H
		22DD-22H	1-1/32 to 1-1/4	22C Spring	22H
		22DD-22D	1-5/16 to 1-1/2	22D	22D
		---	1-9/16 to 1-5/8	22D	22DD
3 Ultramatic 2" and 2-3/8" Capacity Spindle	542-3-51	23-22	3/4 to 1	23AM**	22
		23-22H	1-1/16 to 1-1/4	23AM**	22H
		23-22D	1-5/16 to 1-1/2	23AM**	22D
		23	1-9/16 to 2	23AM**	23
		23-22	41/64 to 1	22	22
		23-22H	1-1/32 to 1-1/4	22 Stub	22H
		23-22H	1-1/32 to 1-1/4	22C Spring	22H
		23-22D	1-5/16 to 1-1/2	22D	22D
		23-22D	1-9/16 to 1-5/8	22D	22DD
		23-22DD	1-9/16 to 1-5/8	23AM**	22DD
3 Ultramatic 2-3/8" Capacity with Outside Feeding Arr.	542-3-51 to 542-3-319	---	2-1/16 to 2-3/8	23A	26MD Pads
	542-3-320		2-1/16 to 2-3/8	23A	23 Inverted

** Adapters shown come with machines and fit standard feed tubes. For other adapters, see page 28. Note: Spring and Stub Collets of the same designation are completely interchangeable. Different collet types may require different chuck sleeves and chuck nuts. A chart of chuck sleeves is shown on page 113.*

Using Feed Tubes, Adapters, Chuck Nuts and Sleeves furnished with machines.

Note: if feed tube is not the original, measure overall length and call a tooling distributor

Machine No.	Starting With Serial No.	Capacity		Collet No.	Feeding Finger No.
		Adapter *	Round Stock (Inches)		
4 Auto.	Prior to 297 with 1-7/8" Capacity Spindle		1/2 to 1-1/4 1-5/16 to 1-1/2 1-9/16 to 1-7/8	24M Master 24M Master 24	24M Master 24 24MD Master
	Prior to 297 with 2-3/8" Capacity Spindle		3/4 to 1-3/4 1-13/16 to 2 2-1/16 to 2-3/8	26M Master 26M Master 26	26M Master 26 Special
4 Auto.	542-4-1		3/4 to 1-3/4 1-13/16 to 2 2-1/16 to 2-3/8	26M Master 26M Master 26	26M Master 26 24ME Master
6 Auto.	All Machines		3/4 to 1-3/4 1-13/16 to 2 2-1/16 to 2-3/8	26M Master 26M Master 26	26M Master 26 26MD Master

** Adapters shown come with machines and fit standard feed tubes. For other adapters, see page 28. Note: Spring and Stub Collets of the same designation are completely interchangeable. Different collet types may require different chuck sleeves and chuck nuts. A chart of chuck sleeves is shown on page 113.*

SPRING COLLETS AND FEEDING FINGERS

B & S **Spring Collets** are designed and made with a high degree of concentricity that will result in correspondingly precise work. They hold the stock accurately and securely for smooth, fast operation. The heads are hardened and ground, and working stresses are distributed evenly throughout, resulting in a long wear-life. Most round sizes come with concentric rings in the I.D. Smooth I.D.'s are available.

B & S **Feeding Fingers** are constructed with spring tempered steel bodies and hardened bearing sections. The work stresses are distributed evenly. These fingers provide positive feeding with long wear — aids to sustained high production.

Master Spring Collets and Spring Collet Blanks, Master Feeding Fingers and Feeding Finger Blanks, Nylon Feeding Finger Pads, and Stub Collets are also shown on the following pages.

SPRING COLLETS

Collet	Over-all (A)	Bearing Back (B)
00	2-1/32"	11/16"
10	2-17/32"	15/16"
11	2-29/32"	1-1/16"
11C	2-29/32"	1-3/16"
21	2-27/32"	1-1/4"
22	4-9/32"	1-1/2"
10B	2-1/2"	15/16"
22B	4-1/4"	1-5/8"
22C	4-1/4"	1-3/4"
22D	4-5/16"	2-1/8"
23A	4.35"	2.6"
24	5"	2-5/16"
26	5-7/8"	2-13/16"

FEEDING FINGERS

Finger No.	Over-all Length	Thread
00	2-1/2"	27/64"-32-LH
00A	2-1/2"	1/2-32"-LH
10	2-15/16"	9/16"-20-LH
10A	2-15/16"	5/8"-32-LH
10AA	4-5/16"	7/8"-32-LH
11	3-7/16"	11/16"-20-LH
11A	3-7/16"	13/16"-20-LH
11AA	3-7/16"	13/16"-20-LH
12	4"	1-1/16"-20-LH
21	4-3/8"	13/16"-20-LH
21A	5-5/16"	15/16"-20-LH
22	6"	1-3/16"-20-LH
22A	6-1/2"	1-5/16"-20-LH
22D	6"	1-11/16"-20-LH
22DD	7-3/8"	1-13/16"-20-LH
22H	6"	1-7/16"-20-LH
23	5.51"	2-1/4"-20-LH
24	7"	1-7/8"-16-RH
26	8"	2-3/8"-16-RH

Note: Collet and feeding finger selection charts are shown on pages 3 thru 7.

STUB COLLETS

Grip Tighter — Won't Stick
Use Same Set-up as Spring Collets!

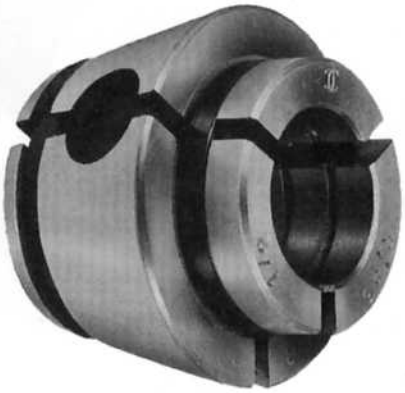

B&S Stub Collets use the same standard chuck nuts and sleeves as spring collets. You just take out the old spring collet and put in the new Stub Collet.

Years of customer tests prove that switching to new B&S Stub Collets can improve your machine work:

First: You improve accuracy. B&S Stub Collets hold the stock with more concentricity.

Second: You get up to 36% greater gripping power. B&S Stub Collets always close parallel.

Third: You virtually eliminate special and decimal size collets. Each Stub Collet has a range of plus .005" to minus .010". The range for spring collets is plus .002" to minus .003".

B & S Stub Collets are completely interchangeable with Spring Collets. Available in round, square and hexagonal styles in sizes for most applications.

Sizes available: No. 10, No. 11, No. 22, No. 22D, No. 23. Most round sizes come with concentric rings in the bore. Smooth bores are also available as specials.

A listing of Stub Collets, by size, is shown on pages 14 thru 20.

The B & S Difference

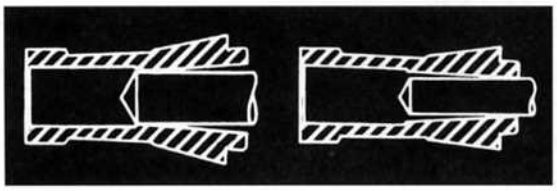

Spring Type Collets

Spring type collets can only close parallel on exact-size stock — because of back end hinge action.

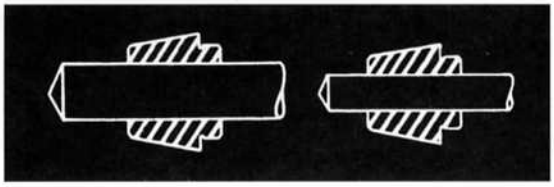

B & S Stub Collets

B & S Stub Collets close parallel throughout range of +.005" to - .010".

STUB COLLETS

Features

- Completely interchangeable with Spring Collets.
- Extended range +.005" to -.010".
- Eliminates need for most special, decimal and metric sizes.
  Example: 1/16" No. 10 Collet holds stock sizes ranging from .052" to .067" (1.3mm to 1.7mm).
  5/64" No. 10 Collet holds stock from .067" to .083" (1.7mm to 2.1mm) etc.
- Grip tighter — hold more accurately.
- Dual function: Used in Turret Tool Holders (see Stub Collet Holders, page 56).

Stub Collet Specifications (Smooth or with rings)

Round	Square	Hexagonal	Rubber insert	Circlip	Spring insert
No. 10 Stub Collets					
1/16, 5/64, 3/32, 7/64 1/8 thru 1/2 by 1/64	1/8, 3/16, 5/32, 7/32, 1/4, 5/16	1/8, 3/16, 5/32, 7/32, 1/4, 5/16, 3/8, 7/16, 9/32, 11/32, 13/32	210-710-1	210-110	210-710-2
No. 11 Stub Collets†					
1/16, 5/64, 3/32, 7/64 1/8 thru 5/8 by 1/64 21/32, 11/16, 23/32, 3/4, 13/16	1/8 thru 1/2 by 1/16	5/32, 7/32, 9/32, 11/32 13/32, 15/32, 3/16, 1/4 5/16, 3/8, 7/16, 1/2, 9/16, 5/8	210-710-1	210-111	210-710-2
No. 22 Stub Collets*					
1/8 thru 1 by 1/64 1-1/32 thru 1-1/4 by 1/32	1/4 thru 7/8 by 1/16	1/4 thru 7/8 by 1/16 15/16, 1, 1-1/16	210-710-1	210-122	210-710-2
No. 22D Stub Collets					
1-5/16 thru 1-5/8 by 1/16	1, 1-1/16, 1-1/8	1-1/8 thru 1-3/8 by 1/16	210-710-1	210-422	210-710-2
No. 23 Stub Collets					
1-5/16 thru 2-3/8 by 1/16	1, 1-1/16, 1-1/8, 1-1/4, 1-3/8	1-1/8 thru 2 by 1/16	210-710-1	210-723	210-710-2

† *No. 11 Stub Collets can be used in place of 11C Spring Collets for round stock from 32/64 thru 3/4".*

* *No. 22 Stub Collets can be used in place of #22C Spring Collets in the following size ranges: Round 1-1/16" thru 1-1/4"; Square 3/4" thru 7/8"; Hexagonal 15/16" thru 1-1/16".*

Note: A set of No. 10 Stub Collets is available - See page 57.

Please see pages 14 to 20 for specific collet sizes and part numbers.

For help selecting Feed Fingers, see pages 3 thru 8 and 21 thru 25.

DOUBLE GRIP COLLET ARRANGEMENT

The best way to solve collet grip problems and to eliminate them forever is to use the Double Grip Collet Arrangement.

For jobs with push back problems, or which produce very high thrust loads, it is recommended that the double grip collet arrangement be used. This arrangement develops almost twice the gripping power of the conventional spring collet. It occupies the same space as the spring collet and sleeve.

In operation, the closing tube pushes the inner sleeve which closes the inner stub collet. The inner stub collet pushes the outer sleeve which closes the outer stub collet.

The collet closing mechanism, the collet grip adjustment, and the procedure for the removal of the collets and sleeves is the same as for spring collets.

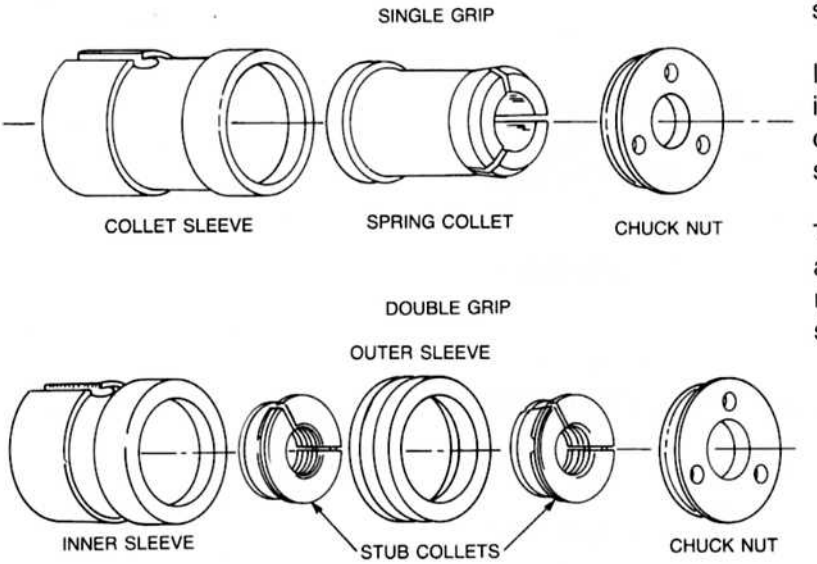

Machine	Ordering No.
No. 2 Ultramatic 1-1/4" spindle capacity For No. 22 Stub Collets 1/8" to 1-1/4"	**42-21609**
No. 2 Ultramatic 1-5/8" spindle capacity For No. 22 Stub Collets 1/8" to 1-1/4" (After S/N 542-2-7575)	**42-21611**
No. 2 Ultramatic 1-5/8" spindle capacity For No. 22D Stub Collets 1-5/16" to 1-5/8"	**42-21606**
No. 3 Ultramatic 2" or 2-3/8" spindle capacity For No. 23 Stub Collets 1-5/16" to 2-3/8"	**42-21607**

SPRING COLLETS

Spring Collet and Collet Blank Specifications

Round	Square	Hexagonal
No. 00 Spring Collets		
1/16 thru 7/64 by 1/64 1/8 thru 1/2 by 1/64	1/8, 3/16, 5/32, 7/32, 1/4	1/8, 3/16, 3/32, 5/32, 7/32, 9/32, 1/4, 5/16
(No. 00 sizes 7/16" and larger do not have nose projection.)		
No. 10 Spring Collets		
1/16,5/64, 3/32, 7/64 1/8 thru 1/2 by 1/64 9/16, 5/8	1/8, 3/16, 5/32, 7/32, 1/4, 5/16	1/8, 3/16, 5/32, 7/32, 1/4, 5/16, 3/8, 7/16, 9/32, 11/32, 13/32
No. 11Spring Collets		
1/16, 5/64, 3/32, 7/64 1/8 thru 5/8 by 1/64 11/16, 3/4, 13/16	1/8, 3/16, 1/4, 5/16, 3/8, 7/16	5/32, 7/32, 3/16 thru 5/8 by 1/16,9/32, 11/32, 13/32, 15/32
No. 11C Spring Collets		
17/32 thru 3/4 by 1/32	1/2	1/2, 9/16, 5/8
No. 21 Spring Collets		
1/8 thru 5/8 by 1/32 11/16, 3/4, 13/16, 7/8, 15/16, 1	1/4 thru 9/16 by 1/16	1/4 thru 3/4 by 1/16
No. 22 Spring Collets		
1/8 thru 5/16 by 1/32 21/64 thru 1 by 1/64	1/4 thru 11/16 by 1/16	1/4 thru 7/8 by 1/16
No. 22C Spring Collets, Taper Nose		
1-1/32 thru 1-1/4 by 1/32	3/4, 13/16, 7/8	15/16, 1, 1-1/16
No. 22D Spring Collets, Taper Nose		
1-1/32 thru 1-5/8 by 1/16	3/4, 13/16, 7/8, 1, 1-1/16, 1-1/8	1-5/16 thru 1-3/8 by 1/16
No. 23A Spring Collets, Taper Nose		
2-1/16 thru 2-3/8 by 1/16		1-13/16 thru 2 by 1/16
No. 26 Spring Collets, Taper Nose		
2-1/16 thru 2-3/8 by 1/16		1-13/16 to 2, inclusive Made to order

Note: For specific collet sizes and part numbers see pages 14 thru 20.

For help selecting Feed Fingers, see pages 3 thru 8 and 23 thru 25.

SPRING COLLETS FOR ATTACHMENTS

Spring Collets
For Use in Burring Attachments

These collets are hardened, tempered, completely finished and ready to use. They have ground bearing surfaces and accurately ground holes. The rear of the collet has a threaded hole to receive a collet nut.

No. 107 Spring Collets
for 00 Attachments Comm.
Serial No. 2082

Hole Diameter	Tool No.
1/16"	**710-1004-107**
3/32"	**710-1006-107**
1/8"	**710-1008-107**
5/32"	**710-1010-107**
3/16"	**710-1012-107**
7/32"	**710-1014-107**
1/4"	**710-1016-107**
9/32"	**710-1018-107**
5/16"	**710-1020-107**
11/32"	**710-1022-107**
3/8"	**710-1024-107**
7/16"	**710-1028-107-1**
1/2"	**710-1032-107-1**

NO. 108 Spring Collets
For OG Attachments Comm.
Serial No. 1313

Hole Diameter	Tool No.
1/4"	**710-1016-108**
5/16"	**710-1020-108**
3/8"	**710-1024-108**
7/16"	**710-1028-108**
1/2"	**710-1032-108**
9/16"	**710-1036-108**

No. 109 Spring Collets
For use in No. 2 Burring
Attachments Comm. Serial No. 786

Hole Diameter	Tool No.
1/4"	**710-1016-109**
5/16"	**710-1020-109**
3/8"	**710-1024-109**
7/16"	**710-1028-109**
1/2"	**710-1032-109**
5/8"	**710-1040-109**
11/16"	**710-1044-109**
3/4"	**710-1048-109**

MASTER SPRING COLLETS

No. 23A Master Spring Collets, Taper Nose
Use 26M Pads

	Tool No.
Round or Hexagonal	**710-11224-223**
Square	**710-12224-223**

Steel Pads for Master
23AM and 26M Collets

	Available Sizes
Round	3/4 thru 2" by 1/16
Square	1-1/4, 1-3/8
Hexagonal	1-7/16 thru 1-3/4 by 1/16
Square	to 1-5/8

Note: The screws for the master spring collet pads are 91-505-117. A listing of pads is given on page 20.

SPRING COLLETS

Tool No.	Description
SPRING COLLETS #00	
710- 1004- 100	00 COLLET 1/16 RD
710- 1005- 100	00 COLLET 5/64 RD
710- 1006- 100	00 COLLET 3/32 RD
710- 1007- 100	00 COLLET 7/64 RD
710- 1008- 100	00 COLLET 1/8 RD
710- 1009- 100	00 COLLET 9/64 RD
710- 1010- 100	00 COLLET 5/32 RD
710- 1011- 100	00 COLLET 11/64 RD
710- 1012- 100	00 COLLET 3/16 RD
710- 1013- 100	00 COLLET 13/64 RD
710- 1014- 100	00 COLLET 7/32 RD
710- 1015- 100	00 COLLET 15/64 RD
710- 1016- 100	00 COLLET 1/4 RD
710- 1017- 100	00 COLLET 17/64 RD
710- 1018- 100	00 COLLET 9/32 RD
710- 1019- 100	00 COLLET 19/64 RD
710- 1020- 100	00 COLLET 5/16 RD
710- 1021- 100	00 COLLET 21/64 RD
710- 1022- 100	00 COLLET 11/32 RD
710- 1023- 100	00 COLLET 23/64 RD
710- 1024- 100	00 COLLET 3/8 RD
710- 1025- 100	00 COLLET 25/64 RD
710- 1026- 100	00 COLLET 13/32 RD
710- 1027- 100	00 COLLET 27/64 RD
710- 1028- 100	00 COLLET 7/16 RD
710- 1029- 100	00 COLLET 29/64 RD
710- 1030- 100	00 COLLET 15/32 RD
710- 1031- 100	00 COLLET 31/64 RD
710- 1032- 100	00 COLLET 1/2 RD
710- 2008- 100	00 COLLET 1/8 SQ
710- 2010- 100	00 COLLET 5/32 SQ
710- 2012- 100	00 COLLET 3/16 SQ
710- 2014- 100	00 COLLET 7/32 SQ
710- 2016- 100	00 COLLET 1/4 SQ
710- 3006- 100	00 COLLET 3/32 HX
710- 3008- 100	00 COLLET 1/8 HX
710- 3010- 100	00 COLLET 5/32 HX
710- 3012- 100	00 COLLET 3/16 HX
710- 3014- 100	00 COLLET 7/32 HX
710- 3016- 100	00 COLLET 1/4 HX
710- 3018- 100	00 COLLET 9/32 HX
710- 3020- 100	00 COLLET 5/16 HX
SPRING COLLETS #10	
710- 1004- 110	10 COLLET 1/16 RD
710- 1005- 110	10 COLLET 5/64 RD
710- 1006- 110	10 COLLET 3/32 RD
710- 1007- 110	10 COLLET 7/64 RD

Tool No.	Description
710- 1008- 110	10 COLLET 1/8 RD
710- 1009- 110	10 COLLET 9/64 RD
710- 1010- 110	10 COLLET 5/32 RD
710- 1011- 110	10 COLLET 11/64 RD
710- 1012- 110	10 COLLET 3/16 RD
710- 1013- 110	10 COLLET 13/64 RD
710- 1014- 110	10 COLLET 7/32 RD
710- 1015- 110	10 COLLET 15/64 RD
710- 1016- 110	10 COLLET 1/4 RD
710- 1017- 110	10 COLLET 17/64 RD
710- 1018- 110	10 COLLET 9/32 RD
710- 1019- 110	10 COLLET 19/64 RD
710- 1020- 110	10 COLLET 5/16 RD
710- 1021- 110	10 COLLET 21/64 RD
710- 1022- 110	10 COLLET 11/32 RD
710- 1023- 110	10 COLLET 23/64 RD
710- 1024- 110	10 COLLET 3/8 RD
710- 1025- 110	10 COLLET 25/64 RD
710- 1026- 110	10 COLLET 13/32 RD
710- 1027- 110	10 COLLET 27/64 RD
710- 1028- 110	10 COLLET 7/16 RD
710- 1029- 110	10 COLLET 29/64 RD
710- 1030- 110	10 COLLET 15/32 RD
710- 1031- 110	10 COLLET 31/64 RD
710- 1032- 110	10 COLLET 1/2 RD
710- 1036- 110	10 COLLET 9/16 RD
710- 1040- 110	10 COLLET 5/8 RD
710- 2008- 110	10 COLLET 1/8 SQ
710- 2010- 110	10 COLLET 5/32 SQ
710- 2012- 110	10 COLLET 3/16 SQ
710- 2014- 110	10 COLLET 7/32 SQ
710- 2016- 110	10 COLLET 1/4 SQ
710- 2020- 110	10 COLLET 5/16 SQ
710- 3008- 110	10 COLLET 1/8 HX
710- 3010- 110	10 COLLET 5/32 HX
710- 3012- 110	10 COLLET 3/16 HX
710- 3014- 110	10 COLLET 7/32 HX
710- 3016- 110	10 COLLET 1/4 HX
710- 3018- 110	10 COLLET 9/32 HX
710- 3020- 110	10 COLLET 5/16 HX
710- 3022- 110	10 COLLET 11/32 HX
710- 3024- 110	10 COLLET 3/8 HX
710- 3026- 110	10 COLLET 13/32 HX
710- 3028- 110	10 COLLET 7/16 HX
STUB COLLETS #10	
710- 1004- 710	10 STUB COLLET 1/16 RD
710- 1005- 710	10 STUB COLLET 5/64 RD
710- 1006- 710	10 STUB COLLET 3/32 RD

Tool No.	Description
710- 1007- 710	10 STUB COLLET 7/64 RD
710- 1008- 710	10 STUB COLLET 1/8 RD
710- 1009- 710	10 STUB COLLET 9/64 RD
710- 1010- 710	10 STUB COLLET 5/32 RD
710- 1011- 710	10 STUB COLLET 11/64 RD
710- 1012- 710	10 STUB COLLET 3/16 RD
710- 1013- 710	10 STUB COLLET 13/64 RD
710- 1014- 710	10 STUB COLLET 7/32 RD
710- 1015- 710	10 STUB COLLET 15/64 RD
710- 1016- 710	10 STUB COLLET 1/4 RD
710- 1017- 710	10 STUB COLLET 17/64 RD
710- 1018- 710	10 STUB COLLET 9/32 RD
710- 1019- 710	10 STUB COLLET 19/64 RD
710- 1020- 710	10 STUB COLLET 5/16 RD
710- 1021- 710	10 STUB COLLET 21/64 RD
710- 1022- 710	10 STUB COLLET 11/32 RD
710- 1023- 710	10 STUB COLLET 23/64 RD
710- 1024- 710	10 STUB COLLET 3/8 RD
710- 1025- 710	10 STUB COLLET 25/64 RD
710- 1026- 710	10 STUB COLLET 13/32 RD
710- 1027- 710	10 STUB COLLET 27/64 RD
710- 1028- 710	10 STUB COLLET 7/16 RD
710- 1029- 710	10 STUB COLLET 29/64 RD
710- 1030- 710	10 STUB COLLET 15/32 RD
710- 1031- 710	10 STUB COLLET 31/64 RD
710- 1032- 710	10 STUB COLLET 1/2 RD
710- 2008- 710	10 STUB COLLET 1/8 SQ
710- 2010- 710	10 STUB COLLET 5/32 SQ
710- 2014- 710	10 STUB COLLET 7/32 SQ
710- 2016- 710	10 STUB COLLET 1/4 SQ
710- 2020- 710	10 STUB COLLET 5/16 SQ
710- 3008- 710	10 STUB COLLET 1/8 HX
710- 3010- 710	10 STUB COLLET 5/32 HX
710- 3012- 710	10 STUB COLLET 3/16 HX
710- 3014- 710	10 STUB COLLET 7/32 HX
710- 3016- 710	10 STUB COLLET 1/4 HX
710- 3018- 710	10 STUB COLLET 9/32 HX
710- 3020- 710	10 STUB COLLET 5/16 HX
710- 3022- 710	10 STUB COLLET 11/32 HX
710- 3024- 710	10 STUB COLLET 3/8 HX
710- 3026- 710	10 STUB COLLET 13/32 HX
710- 3028- 710	10 STUB COLLET 7/16 HX

SPRING COLLETS #11

710- 1004- 111	11 COLLET 1/16 RD
710- 1005- 111	11 COLLET 5/64 RD
710- 1006- 111	11 COLLET 3/32 RD
710- 1007- 111	11 COLLET 7/64 RD
710- 1008- 111	11 COLLET 1/8 RD

Tool No.	Description
710- 1009- 111	11 COLLET 9/64 RD
710- 1010- 111	11 COLLET 5/32 RD
710- 1011- 111	11 COLLET 11/64 RD
710- 1012- 111	11 COLLET 3/16 RD
710- 1013- 111	11 COLLET 13/64 RD
710- 1014- 111	11 COLLET 7/32 RD
710- 1015- 111	11 COLLET 15/64 RD
710- 1016- 111	11 COLLET 1/4 RD
710- 1017- 111	11 COLLET 17/64 RD
710- 1018- 111	11 COLLET 9/32 RD
710- 1019- 111	11 COLLET 19/64 RD
710- 1020- 111	11 COLLET 5/16 RD
710- 1021- 111	11 COLLET 21/64 RD
710- 1022- 111	11 COLLET 11/32 RD
710- 1023- 111	11 COLLET 23/64 RD
710- 1024- 111	11 COLLET 3/8 RD
710- 1025- 111	11 COLLET 25/64 RD
710- 1026- 111	11 COLLET 13/32 RD
710- 1027- 111	11 COLLET 27/64 RD
710- 1028- 111	11 COLLET 7/16 RD
710- 1029- 111	11 COLLET 29/64 RD
710- 1030- 111	11 COLLET 15/32 RD
710- 1031- 111	11 COLLET 31/64 RD
710- 1032- 111	11 COLLET 1/2 RD
710- 1033- 111	11 COLLET 33/64 RD
710- 1034- 111	11 COLLET 17/32 RD
710- 1035- 111	11 COLLET 35/64 RD
710- 1036- 111	11 COLLET 9/16 RD
710- 1037- 111	11 COLLET 37/64 RD
710- 1038- 111	11 COLLET 19/32 RD
710- 1039- 111	11 COLLET 39/64 RD
710- 1040- 111	11 COLLET 5/8 RD
710- 1044- 111	11 COLLET 11/16 RD
710- 1048- 111	11 COLLET 3/4 RD
710- 1052- 111	11 COLLET 13/16 RD
710- 2008- 111	11 COLLET 1/8 SQ
710- 2012- 111	11 COLLET 3/16 SQ
710- 2016- 111	11 COLLET 1/4 SQ
710- 2020- 111	11 COLLET 5/16 SQ
710- 2024- 111	11 COLLET 3/8 SQ
710- 2028- 111	11 COLLET 7/16 SQ
710- 3010- 111	11 COLLET 5/32 HX
710- 3012- 111	11 COLLET 3/16 HX
710- 3016- 111	11 COLLET 1/4 HX
710- 3018- 111	11 COLLET 9/32 HX
710- 3020- 111	11 COLLET 5/16 HX
710- 3022- 111	11 COLLET 11/32 HX
710- 3024- 111	11 COLLET 3/8 HX
710- 3026- 111	11 COLLET 13/32 HX

SPRING COLLETS

Tool No.	Description
710- 3028- 111	11 COLLET 7/16 HX
710- 3030- 111	11 COLLET 15/32 HX
710- 3032- 111	11 COLLET 1/2 HX
710- 3036- 111	11 COLLET 9/16 HX
710- 3040- 111	11 COLLET 5/8 HX

STUB COLLETS #11

710- 1005- 711	11 STUB COLLET 5/64 RD
710- 1006- 711	11 STUB COLLET 3/32 RD
710- 1007- 711	11 STUB COLLET 7/64 RD
710- 1008- 711	11 STUB COLLET 1/8 RD
710- 1009- 711	11 STUB COLLET 9/64 RD
710- 1010- 711	11 STUB COLLET 5/32 RD
710- 1011- 711	11 STUB COLLET 11/64 RD
710- 1012- 711	11 STUB COLLET 3/16 RD
710- 1013- 711	11 STUB COLLET 13/64 RD
710- 1014- 711	11 STUB COLLET 7/32 RD
710- 1015- 711	11 STUB COLLET 15/64 RD
710- 1016- 711	11 STUB COLLET 1/4 RD
710- 1017- 711	11 STUB COLLET 17/64 RD
710- 1018- 711	11 STUB COLLET 9/32 RD
710- 1019- 711	11 STUB COLLET 19/64 RD
710- 1020- 711	11 STUB COLLET 5/16 RD
710- 1021- 711	11 STUB COLLET 21/64 RD
710- 1022- 711	11 STUB COLLET 11/32 RD
710- 1023- 711	11 STUB COLLET 23/64 RD
710- 1024- 711	11 STUB COLLET 3/8 RD
710- 1025- 711	11 STUB COLLET 25/64 RD
710- 1027- 711	11 STUB COLLET 27/64 RD
710- 1028- 711	11 STUB COLLET 7/16 RD
710- 1029- 711	11 STUB COLLET 29/64 RD
710- 1030- 711	11 STUB COLLET 15/32 RD
710- 1031- 711	11 STUB COLLET 31/64 RD
710- 1032- 711	11 STUB COLLET 1/2 RD
710- 1033- 711	11 STUB COLLET 33/64 RD
710- 1034- 711	11 STUB COLLET 17/32 RD
710- 1035- 711	11 STUB COLLET 35/64 RD
710- 1036- 711	11 STUB COLLET 9/16 RD
710- 1037- 711	11 STUB COLLET 37/64 RD
710- 1038- 711	11 STUB COLLET 19/32 RD
710- 1039- 711	11 STUB COLLET 39/64 RD
710- 1040- 711	11 STUB COLLET 5/8 RD
710- 1042- 711	11 STUB COLLET 21/32 RD
710- 1044- 711	11 STUB COLLET 11/16 RD
710- 1046- 711	11 STUB COLLET 23/32 RD
710- 1048- 711	11 STUB COLLET 3/4 RD
710- 1052- 711	11 STUB COLLET 13/16 RD
710- 2012- 711	11 STUB COLLET 3/16 SQ
710- 2016- 711	11 STUB COLLET 1/4 SQ

Tool No.	Description
710- 2024- 711	11 STUB COLLET 3/8 SQ
710- 2028- 711	11 STUB COLLET 7/16 SQ
710- 2032- 711	11 STUB COLLET 1/2 SQ
710- 3012- 711	11 STUB COLLET 3/16HX
710- 3014- 711	11 STUB COLLET 7/32 HX
710- 3016- 711	11 STUB COLLET 1/4 HX
710- 3020- 711	11 STUB COLLET 5/16 HX
710- 3024- 711	11 STUB COLLET 3/8 HX
710- 3026- 711	11 STUB COLLET 13/32 HX
710- 3028- 711	11 STUB COLLET 7/16 HX
710- 3032- 711	11 STUB COLLET 1/2 HX
710- 3036- 711	11 STUB COLLET 9/16 HX
710- 3040- 711	11 STUB COLLET 5/8 HX

SPRING COLLETS #11C

710- 1034- 211	11C COLLET 17/32 RD
710- 1036- 211	11C COLLET 9/16 RD
710- 1038- 211	11C COLLET 19/32 RD
710- 1040- 211	11C COLLET 5/8 RD
710- 1042- 211	11C COLLET 21/32 RD
710- 1044- 211	11C COLLET 11/16 RD
710- 1046- 211	11C COLLET 23/32 RD
710- 1048- 211	11C COLLET 3/4 RD
710- 2032- 211	11C COLLET 1/2 SQ
710- 3032- 211	11C COLLET 1/2 HX
710- 3036- 211	11C COLLET 9/16 HX
710- 3040- 211	11C COLLET 5/8 HX

SPRING COLLETS #21

710- 1008- 121	21 COLLET 1/8 RD
710- 1010- 121	21 COLLET 5/32 RD
710- 1012- 121	21 COLLET 3/16 RD
710- 1014- 121	21 COLLET 7/32 RD
710- 1016- 121	21 COLLET 1/4 RD
710- 1018- 121	21 COLLET 9/32 RD
710- 1020- 121	21 COLLET 5/16 RD
710- 1022- 121	21 COLLET 11/32 RD
710- 1024- 121	21 COLLET 3/8 RD
710- 1026- 121	21 COLLET 13/32 RD
710- 1028- 121	21 COLLET 7/16 RD
710- 1030- 121	21 COLLET 15/32 RD
710- 1032- 121	21 COLLET 1/2 RD
710- 1034- 121	21 COLLET 17/32 RD
710- 1036- 121	21 COLLET 9/16 RD
710- 1038- 121	21 COLLET 19/32 RD
710- 1040- 121	21 COLLET 5/8 RD
710- 1044- 121	21 COLLET 11/16 RD
710- 1048- 121	21 COLLET 3/4 RD
710- 1052- 121	21 COLLET 13/16 RD

Tool No.	Description
710- 1056- 121	21 COLLET 7/8 RD
710- 1060- 121	21 COLLET 15/16 RD
710- 1064- 121	21 COLLET 1 RD
710- 2016- 121	21 COLLET 1/4 SQ
710- 2020- 121	21 COLLET 5/16 SQ
710- 2024- 121	21 COLLET 3/8 SQ
710- 2028- 121	21 COLLET 7/16 SQ
710- 2032- 121	21 COLLET 1/2 SQ
710- 2036- 121	21 COLLET 9/16 SQ
710- 3016- 121	21 COLLET 1/4 HX
710- 3020- 121	21 COLLET 5/16 HX
710- 3024- 121	21 COLLET 3/8 HX
710- 3028- 121	21 COLLET 7/16 HX
710- 3032- 121	21 COLLET 1/2 HX
710- 3044- 121	21 COLLET 11/16 HX
710- 3048- 121	21 COLLET 3/4 HX

SPRING COLLETS #22

710- 1008- 122	22 COLLET 1/8 RD
710- 1010- 122	22 COLLET 5/32 RD
710- 1012- 122	22 COLLET 3/16 RD
710- 1014- 122	22 COLLET 7/32 RD
710- 1016- 122	22 COLLET 1/4 RD
710- 1018- 122	22 COLLET 9/32 RD
710- 1020- 122	22 COLLET 5/16 RD
710- 1021- 122	22 COLLET 21/64 RD
710- 1022- 122	22 COLLET 11/32 RD
710- 1023- 122	22 COLLET 23/64 RD
710- 1024- 122	22 COLLET 3/8 RD
710- 1025- 122	22 COLLET 25/64 RD
710- 1026- 122	22 COLLET 13/32 RD
710- 1027- 122	22 COLLET 27/64 RD
710- 1028- 122	22 COLLET 7/16 RD
710- 1029- 122	22 COLLET 29/64 RD
710- 1030- 122	22 COLLET 15/32 RD
710- 1031- 122	22 COLLET 31/64 RD
710- 1032- 122	22 COLLET 1/2 RD
710- 1033- 122	22 COLLET 33/64 RD
710- 1034- 122	22 COLLET 17/32 RD
710- 1035- 122	22 COLLET 35/64 RD
710- 1036- 122	22 COLLET 9/16 RD
710- 1037- 122	22 COLLET 37/64 RD
710- 1038- 122	22 COLLET 19/32 RD
710- 1039- 122	22 COLLET 39/64 RD
710- 1040- 122	22 COLLET 5/8 RD
710- 1041- 122	22 COLLET 41/64 RD
710- 1042- 122	22 COLLET 21/32 RD
710- 1043- 122	22 COLLET 43/64 RD
710- 1044- 122	22 COLLET 11/16 RD

Tool No.	Description
710- 1045- 122	22 COLLET 45/64 RD
710- 1046- 122	22 COLLET 23/32 RD
710- 1047- 122	22 COLLET 47/64 RD
710- 1048- 122	22 COLLET 3/4 RD
710- 1049- 122	22 COLLET 49/64 RD
710- 1050- 122	22 COLLET 25/32 RD
710- 1051- 122	22 COLLET 51/64 RD
710- 1052- 122	22 COLLET 13/16 RD
710- 1053- 122	22 COLLET 53/64 RD
710- 1054- 122	22 COLLET 27/32 RD
710- 1055- 122	22 COLLET 55/64 RD
710- 1056- 122	22 COLLET 7/8 RD
710- 1057- 122	22 COLLET 57/64 RD
710- 1058- 122	22 COLLET 29/32 RD
710- 1059- 122	22 COLLET 59/64 RD
710- 1060- 122	22 COLLET 15/16 RD
710- 1061- 122	22 COLLET 61/64 RD
710- 1062- 122	22 COLLET 31/32 RD
710- 1063- 122	22 COLLET 63/64 RD
710- 1064- 122	22 COLLET 1 RD
710- 2016- 122	22 COLLET 1/4 SQ
710- 2020- 122	22 COLLET 5/16 SQ
710- 2024- 122	22 COLLET 3/8 SQ
710- 2028- 122	22 COLLET 7/16 SQ
710- 2032- 122	22 COLLET 1/2 SQ
710- 2036- 122	22 COLLET 9/16 SQ
710- 2040- 122	22 COLLET 5/8 SQ
710- 2044- 122	22 COLLET 11/16 SQ
710- 3016- 122	22 COLLET 1/4 HX
710- 3020- 122	22 COLLET 5/16 HX
710- 3024- 122	22 COLLET 3/8 HX
710- 3028- 122	22 COLLET 7/16 HX
710- 3032- 122	22 COLLET 1/2 HX
710- 3036- 122	22 COLLET 9/16 HX
710- 3040- 122	22 COLLET 5/8 HX
710- 3044- 122	22 COLLET 11/16 HX
710- 3048- 122	22 COLLET 3/4 HX
710- 3052- 122	22 COLLET 13/16 HX
710- 3056- 122	22 COLLET 7/8 HX

STUB COLLETS #22

710- 1008- 722	22 STUB COLLET 1/8 RD
710- 1009- 722	22 STUB COLLET 9/64 RD
710- 1010- 722	22 STUB COLLET 5/32 RD
710- 1011- 722	22 STUB COLLET 11/64 RD
710- 1012- 722	22 STUB COLLET 3/16 RD
710- 1013- 722	22 STUB COLLET 13/64 RD
710- 1014- 722	22 STUB COLLET 7/32 RD
710- 1015- 722	22 STUB COLLET 15/64 RD

SPRING COLLETS

Tool No.	Description
710- 1016- 722	22 STUB COLLET 1/4 RD
710- 1017- 722	22 STUB COLLET 17/64 RD
710- 1018- 722	22 STUB COLLET 9/32 RD
710- 1019- 722	22 STUB COLLET 19/64 RD
710- 1020- 722	22 STUB COLLET 5/16 RD
710- 1021- 722	22 STUB COLLET 21/64 RD
710- 1022- 722	22 STUB COLLET 11/32 RD
710- 1023- 722	22 STUB COLLET 23/64 RD
710- 1024- 722	22 STUB COLLET 3/8 RD
710- 1025- 722	22 STUB COLLET 25/64 RD
710- 1026- 722	22 STUB COLLET 13/32 RD
710- 1027- 722	22 STUB COLLET 27/64 RD
710- 1028- 722	22 STUB COLLET 7/16 RD
710- 1029- 722	22 STUB COLLET 29/64 RD
710- 1030- 722	22 STUB COLLET 15/32 RD
710- 1031- 722	22 STUB COLLET 31/64 RD
710- 1032- 722	22 STUB COLLET 1/2 RD
710- 1033- 722	22 STUB COLLET 33/64 RD
710- 1034- 722	22 STUB COLLET 17/32 RD
710- 1035- 722	22 STUB COLLET 35/64 RD
710- 1036- 722	22 STUB COLLET 9/16 RD
710- 1037- 722	22 STUB COLLET 37/64 RD
710- 1038- 722	22 STUB COLLET 19/32 RD
710- 1039- 722	22 STUB COLLET 39/64 RD
710- 1040- 722	22 STUB COLLET 5/8 RD
710- 1041- 722	22 STUB COLLET 41/64 RD
710- 1042- 722	22 STUB COLLET 21/32 RD
710- 1043- 722	22 STUB COLLET 43/64 RD
710- 1044- 722	22 STUB COLLET 11/16 RD
710- 1045- 722	22 STUB COLLET 45/64 RD
710- 1046- 722	22 STUB COLLET 23/32 RD
710- 1047- 722	22 STUB COLLET 47/64 RD
710- 1048- 722	22 STUB COLLET 3/4 RD
710- 1049- 722	22 STUB COLLET 49/64 RD
710- 1050- 722	22 STUB COLLET 25/32 RD
710- 1051- 722	22 STUB COLLET 51/64 RD
710- 1052- 722	22 STUB COLLET 13/16 RD
710- 1053- 722	22 STUB COLLET 53/64 RD
710- 1054- 722	22 STUB COLLET 27/32 RD
710- 1055- 722	22 STUB COLLET 55/64 RD
710- 1056- 722	22 STUB COLLET 7/8 RD
710- 1057- 722	22 STUB COLLET 57/64 RD
710- 1058- 722	22 STUB COLLET 29/32 RD
710- 1059- 722	22 STUB COLLET 59/64 RD
710- 1060- 722	22 STUB COLLET 15/16 RD
710- 1061- 722	22 STUB COLLET 61/64 RD
710- 1062- 722	22 STUB COLLET 31/32 RD
710- 1063- 722	22 STUB COLLET 63/64 RD
710- 1064- 722	22 STUB COLLET 1 RD

Tool No.	Description
710- 1102- 722	22 STUB COLLET 1 1/32 RD
710- 1104- 722	22 STUB COLLET 1 1/16 RD
710- 1106- 722	22 STUB COLLET 13/32 RD
710- 1108- 722	22 STUB COLLET 1 1/8 RD
710- 1110- 722	22 STUB COLLET 1 5/32 RD
710- 1112- 722	22 STUB COLLET 1 3/16 RD
710- 1114- 722	22 STUB COLLET 1 7/32 RD
710- 1116- 722	22 STUB COLLET 1 1/4 RD
710- 2016- 722	22 STUB COLLET 1/4 SQ
710- 2020- 722	22 STUB COLLET 5/16 SQ
710- 2024- 722	22 STUB COLLET 3/8 SQ
710- 2028- 722	22 STUB COLLET 7/16 SQ
710- 2032- 722	22 STUB COLLET 1/2 SQ
710- 2036- 722	22 STUB COLLET 9/16 SQ
710- 2040- 722	22 STUB COLLET 5/8 SQ
710- 2044- 722	22 STUB COLLET 11/16 SQ
710- 2048- 722	22 STUB COLLET 3/4 SQ
710- 2052- 722	22 STUB COLLET 13/16 SQ
710- 2056- 722	22 STUB COLLET 7/8 SQ
710- 3016- 722	22 STUB COLLET 1/4 HX
710- 3020- 722	22 STUB COLLET 5/16 HX
710- 3024- 722	22 STUB COLLET 3/8 HX
710- 3028- 722	22 STUB COLLET 7/16 HX
710- 3032- 722	22 STUB COLLET 1/2 HX
710- 3036- 722	22 STUB COLLET 9/16 HX
710- 3040- 722	22 STUB COLLET 5/8 HX
710- 3044- 722	22 STUB COLLET 11/16 HX
710- 3048- 722	22 STUB COLLET 3/4 HX
710- 3052- 722	22 STUB COLLET 13/16 HX
710- 3056- 722	22 STUB COLLET 7/8 HX
710- 3060- 722	22 STUB COLLET 15/16 HX
710- 3064- 722	22 STUB COLLET 1 HX
710- 3104- 722	22 STUB COLLET 11/16 HX

SPRING COLLETS #22C

710- 6102- 322	22C COLLET 1 1/32 RD
710- 6104- 322	22C COLLET 1 1/16 RD
710- 6106- 322	22C COLLET 1 3/32 RD
710- 6108- 322	22C COLLET 1 1/8 RD
710- 6110- 322	22C COLLET 1 5/32 RD
710- 6112- 322	22C COLLET 1 3/16 RD
710- 6114- 322	22C COLLET 1 7/32 RD
710- 6116- 322	22C COLLET 1 1/4 RD
710- 7048- 322	22C COLLET 3/4 SQ
710- 7052- 322	22C COLLET 13/16 SQ
710- 7056- 322	22C COLLET 7/8 SQ
710- 8060- 322	22C COLLET 15/16 HX
710- 8064- 322	22C COLLET 1 HX
710- 8104- 322	22C COLLET 1 1/16 HX

Tool No.	Description
SPRING COLLETS #22D	
710- 6102- 422	22D COLLET 1 1/32 RD
710- 6104- 422	22D COLLET 1 1/16 RD
710- 6106- 422	22D COLLET 1 3/32 RD
710- 6108- 422	22D COLLET 1 1/8 RD
710- 6110- 422	22D COLLET 1 5/32 RD
710- 6112- 422	22D COLLET 1 3/16 RD
710- 6114- 422	22D COLLET 1 7/32 RD
710- 6116- 422	22D COLLET 1 1/4 RD
710- 6120- 422	22D COLLET 1 5/16 RD
710- 6124- 422	22D COLLET 1 3/8 RD
710- 6128- 422	22D COLLET 1 7/16 RD
710- 6132- 422	22D COLLET 1 1/2 RD
710- 6136- 422	22D COLLET 1 9/16 RD
710- 6140- 422	22D COLLET 1 5/8 RD
710- 7048- 422	22D COLLET 3/4 SQ
710- 7052- 422	22D COLLET 13/16 SQ
710- 7056- 422	22D COLLET 7/8 SQ
710- 7064- 422	22D COLLET 1 SQ
710- 7104- 422	22D COLLET 1 1/16 SQ
710- 7108- 422	22D COLLET 1 1/8 SQ
710- 8060- 422	22D COLLET 15/16 HX
710- 8064- 422	22D COLLET 1 HX
710- 8104- 422	22D COLLET 1 1/16 HX
710- 8108- 422	22D COLLET 1 1/8 HX
710- 8112- 422	22D COLLET 1 3/16 HX
710- 8116- 422	22D COLLET 1 1/4 HX
710- 8120- 422	22D COLLET 1 5/16 HX
710- 8124- 422	22D COLLET 1 3/8 HX
STUB COLLETS #22D	
710- 1120- 822	22D STUB COLLET 1 5/16RD
710- 1124- 822	22D STUB COLLET 1-3/8R
710- 1128- 822	22D STUB COLLET 1-7/16R
710- 1132- 822	22D STUB COLLET 1-1/2R
710- 1136- 822	22D STUB COLLET 1-9/16R
710- 1140- 822	22D STUB COLLET 1-5/8R
710- 2064- 822	22D STUB COLLET 1 SQ
710- 2104- 822	22D STUB COLLET 1 1/16 S
710- 2108- 822	22D STUB COLLET 1 1/8SQ
710- 3108- 822	22D STUB COLLET 1 1/8HX
710- 3112- 822	22D STUB COLLET 1 3/16H
710- 3116- 822	22D STUB COLLET 1 1/4HX
710- 3120- 822	22D STUB COLLET 1 5/16H
710- 3124- 822	22D STUB COLLET 1 3/8HX
SPRING COLLETS #23A	
710- 6204- 223	23A COLLET 2 1/16 RD
710- 6208- 223	23A COLLET 2 1/8 RD
710- 6212- 223	23A COLLET 2 3/16 RD

Tool No.	Description
710- 6216- 223	23A COLLET 2 1/4 RD
710- 6220- 223	23A COLLET 2 5/16 RD
710- 6224- 223	23A COLLET 2 3/8 RD
710- 8152- 223	23A COLLET 1 13/16 HX
710- 8156- 223	23A COLLET 1 7/8 HX
710- 8160- 223	23A COLLET 1 15/16 HX
710- 8164- 223	23A COLLET 2 HX
STUB COLLETS #23	
710- 1120- 723	23 STUB COLLET 1 5/16 RD
710- 1124- 723	23 STUB COLLET 1 3/8 RD
710- 1128- 723	23 STUB COLLET 1 7/16 RD
710- 1132- 723	23 STUB COLLET 1 1/2 RD
710- 1136- 723	23 STUB COLLET 1 9/16 RD
710- 1140- 723	23 STUB COLLET 1 5/8 RD
710- 1144- 723	23 STUB COLLET 1 11/16RD
710- 1148- 723	23 STUB COLLET 1 3/4 RD
710- 1152- 723	23 STUB COLLET 1 13/16RD
710- 1156- 723	23 STUB COLLET 1 7/8 RD
710- 1160- 723	23 STUB COLLET 1 15/16RD
710- 1164- 723	23 STUB COLLET 2 RD
710- 1204- 723	23 STUB COLLET 2 1/16 RD
710- 1208- 723	23 STUB COLLET 2 1/8 RD
710- 1212- 723	23 STUB COLLET 2 3/16 RD
710- 1216- 723	23 STUB COLLET 2 1/4 RD
710- 1220- 723	23 STUB COLLET 2 5/16 RD
710- 1224- 723	23 STUB COLLET 2 3/8 RD
710- 2064- 723	23 STUB COLLET 1 SQ
710- 2104- 723	23 STUB COLLET 1 1/16 SQ
710- 2108- 723	23 STUB COLLET 1 1/8 SQ
710- 2116- 723	23 STUB COLLET 1 1/4 SQ
710- 2124- 723	23 STUB COLLET 1 3/8 SQ
710- 2132- 723	23 STUB COLLET 1 1/2 SQ
710- 2140- 723	23 STUB COLLET 1 5/8 SQ
710- 3108- 723	23 STUB COLLET 1 1/8 HX
710- 3112- 723	23 STUB COLLET 1 3/16HX
710- 3116- 723	23 STUB COLLET 1 1/4 HX
710- 3120- 723	23 STUB COLLET 1 5/16HX
710- 3124- 723	23 STUB COLLET 1 3/8 HX
710- 3128- 723	23 STUB COLLET 1 7/16HX
710- 3132- 723	23 STUB COLLET 1 1/2 HX
710- 3136- 723	23 STUB COLLET 1 9/16 HX
710- 3140- 723	23 STUB COLLET 1 5/8 HX
710- 3144- 723	23 STUB COLLET 1 11/16HX
710- 3148- 723	23 STUB COLLET 1 3/4 HX
710- 3152- 723	23 STUB COLLET 1 13/16HX
710- 3156- 723	23 STUB COLLET 1 7/8 HX
710- 3160- 723	23 STUB COLLET 1 15/16HX
710- 3164- 723	23 STUB COLLET 2 HX

SPRING COLLETS

Tool No.	Description
SPRING COLLETS #107	
710- 1004- 107	107 COLLET 1/16 RD
710- 1006- 107	107 COLLET 3/32 RD
710- 1008- 107	107 COLLET 1/8 RD
710- 1010- 107	107 COLLET 5/32 RD
710- 1012- 107	107 COLLET 3/16 RD
710- 1014- 107	107 COLLET 7/32 RD
710- 1016- 107	107 COLLET 1/4 RD
710- 1018- 107	107 COLLET 9/32 RD
710- 1020- 107	107 COLLET 5/16 RD
710- 1022- 107	107 COLLET 11/32 RD
710- 1024- 107	107 COLLET 3/8 RD
710- 1028- 107- 1	107 COLLET 7/16 RD
710- 1032- 107- 1	107 COLLET 1/2 RD
SPRING COLLETS #108	
710- 1016- 108	108 COLLET 1/4 RD
710- 1020- 108	108 COLLET 5/16 RD
710- 1024- 108	108 COLLET 3/8 RD
710- 1028- 108	108 COLLET 7/16 RD
710- 1032- 108	108 COLLET 1/2 RD
710- 1036- 108	108 COLLET 9/16 RD
SPRING COLLETS #109	
710- 1016- 109	109 COLLET 1/4 RD
710- 1020- 109	109 COLLET 5/16 RD
710- 1024- 109	109 COLLET 3/8 RD
710- 1028- 109	109 COLLET 7/16 RD
710- 1032- 109	109 COLLET 1/2 RD
710- 1040- 109	109 COLLET 5/8 RD
710- 1044- 109	109 COLLET 11/16 RD
710- 1048- 109	109 COLLET 3/4 RD
MASTER COLLETS	
710-11224- 223	23A MASTER COLLET-RD-HEX
710-12224- 223	23A MASTER COLLET-SQ
COLLET BLANKS*	
210-1053	107 BURRING ATTCH BLANK
710-91006-1	00 COLLET BLANK RD & HX
710-91012-1	10 COLLET BLANK RD & HX
710-91017-1	11 COLLET BLANK RD & HX
710-91020-1	11C COLLT BLANK RD & HX
710-91025-1	21 COLLET BLANK RD & HX
710-91028-1	22 COLLET BLANK RD & HX
710-92007-1	10 COLLET BLANK SQ
710-92011-1	11 COLLET BLANK SQ

Tool No.	Description
710-92019-1	22 COLLET BLANK SQ
COLLET PADS FOR 26M AND 23M†	
710-31048- 226	26M COLLET PAD 3/4 RD
710-31052- 226	26M COLLET PAD 13/16 RD
710-31056- 226	26M COLLET PAD 7/8 RD
710-31060- 226	26M COLLET PAD 15/16 RD
710-31064- 226	26M COLLET PAD 1 RD
710-31104- 226	26M COLLET PAD 1 1/16 RD
710-31108- 226	26M COLLET PAD 1 1/8 RD
710-31112- 226	26M COLLET PAD 1 3/16 RD
710-31116- 226	26M COLLET PAD 1 1/4 RD
710-31120- 226	26M COLLET PAD 1 5/16 RD
710-31124- 226	26M COLLET PAD 1 3/8 RD
710-31128- 226	26M COLLET PAD 1 7/16 RD
710-31132- 226	26M COLLET PAD 1 1/2 RD
710-31136- 226	26M COLLET PAD 1 9/16 RD
710-31140- 226	26M COLLET PAD 1 5/8 RD
710-31144- 226	26M COLLET PAD 1 11/16R
710-31148- 226	26M COLLET PAD 1 3/4 RD
710-31152- 226	26M COLLET PAD 1 13/16R
710-31156- 226	26M COLLET PAD 1 7/8 RD
710-31160- 226	26M COLLET PAD 1 15/16R
710-31164- 226	26M COLLET PAD 2 RD
710-36224-226	26M COLLET PAD 2 3/8 RD
710-32116- 226	26M COLLET PAD 1 1/4 SQ
710-32124- 226	26M COLLET PAD 1 3/8 SQ
710-33128- 226	26M COLLET PAD 1 7/16 HX
710-33132- 226	26M COLLET PAD 1 1/2 HX
710-33136- 226	26M COLLET PAD 1 9/16 HX
710-33140- 226	26M COLLET PAD 1 5/8 HX
710-33144- 226	26M COLLET PAD 1 11/16H
710-33148- 226	26M COLLET PAD 1 3/4 HX
PARTS FOR STUB COLLETS	
210-710-2	POCKET SPRING
210-710-1	RUBBER INSERT
210-110	CIRCLIP- # 10 STUB COLLET
210-111	CIRCLIP - #11 STUB COLLET
210-122	CIRCLIP - #22 STUB COLLET
210-422	CIRCLIP - #22D STUB COLLET
210-723	CIRCLIP - 23 STUB COLLET

* For heat treating instructions, see Page A-5.

† Sold as sets of 2

FEEDING FINGERS

Round	Square	Hexagonal
No. 00 Feeding Fingers		
1/16, 5/64, 3/32, 7/64 1/8 thru 5/16 by 1/64	1/8, 3/16, 7/32	1/8, 3/16, 1/4
No. 00A Feeding Fingers		
21/64, 11/32, 23/64, 3/8	1/4	5/16
No. 10 Feeding Fingers		
1/16, 5/64, 3/32, 7/64, 1/8 thru 3/8 by 1/64	1/8, 3/16, 1/4	3/16, 1/4, 5/16
No. 10A Feeding Fingers		
25/64 thru 1/2 by 1/64	9/32, 5/16	3/8, 7/16
No. 10AA Feeding Fingers		
33/64 thru 5/8 by 1/64 21/32 thru 3/4 by 1/32	3/8, 7/16, 1/2	1/2, 9/16, 5/8
No. 11 Feeding Fingers		
25/64 thru 1/2 by 1/64	5/16, 3/8	3/8, 7/16
No. 11A Feeding Fingers		
33/64 thru 5/8 by 1/64		1/2
No. 11AA Feeding Fingers		
25/64 thru 5/8 by 1/64	5/16, 3/8,7/16	3/8, 7/16, 1/2
No. 21A Feeding Fingers		
21/32, 11/16, 23/32, 3/4	1/2	9/16, 5/8
No. 22 Feeding Fingers		
41/64 thru 1" by 1/64	1/2 thru 11/16 by 1/16	9/16 thru 7/8 by 1/16
No. 22D Feeding Fingers		
1-5/16, 1-3/8, 1-7/16, 1-1/2	1	1-1/8, 1-3/16, 1-1/4
No.22 DD Feeding Fingers		
1-9/16, 1-5/8	1-1/16, 1-1/8	1-5/16, 1-3/8
No. 22H Feeding Fingers		
1-1/32 thru 1-1/4 by 1/32	3/4, 13/16, 7/8	1 5/16, 1-1/16
No. 23 Feeding Fingers		
1-9/16 thru 2 by 1/16	1-1/4, 1-3/8	1-7/16 thru 1-3/4 by 1/16
No. 23 Inverted Outside Feeding Fingers		
2-1/16 thru 2-3/8 by 1/16	1-1/2, 1-5/8	1-13/16, 1-7/8, 1-15/16, 2
No. 27 Feeding Fingers		
2-1/16 thru 2-3/8	1-1/2, 1-5/8	1-13/16, 1-7/8, 1-15/16, 2

For help selecting Feeding Fingers, see pages 3 thru 8 and 23 thru 25.

MASTER FEEDING FINGERS

These master Feeding Fingers can be used in place of regular fingers of corresponding sizes. A wrench* for use in inserting or removing the pads is furnished.

Description	Tool No.	Wrench
NO. 00M MASTER FEEDING FINGER For use in place of No. 00 Feeding Fingers	**710-26020-100**	**210-51020**
NO. 10M MASTER FEEDING FINGER For use in place of No. 10 Feeding Fingers	**710-26024-110**	**210-51020**
NO. 10AM MASTER FEEDING FINGER For use in place of No. 10A Feeding Fingers	**710-26028-210**	**210-51020**
NO. 11M MASTER FEEDING FINGER For use in place of No. 11 Feeding Fingers	**710-26032-111**	**210-51021**
NO. 11AM MASTER FEEDING FINGER For use in place of No. 11A Feeding Fingers	**710-26036-211**	**210-51021**
NO. 22M MASTER FEEDING FINGER For use in place of No. 22 Feeding Fingers	**710-26056-122**	**210-51022**
NO. 26M MASTER FEEDING FINGERS Round or Hexagonal	**710-21148-126**	

** Wrench for inverted feed finger is 42-58534*
Pads for wrench are 42-59273 and 42-59274

For help selecting Feeding Fingers, see pages 3 thru 8 and 23 thru 25.
For Nylon Pads, see page 26.

Tool No.	Description
FEEDING FINGER #00	
710-16004- 100	00 FEED FINGER 1/16 RD
710-16005- 100	00 FEED FINGER 5/64 RD
710-16006- 100	00 FEED FINGER 3/32 RD
710-16007- 100	00 FEED FINGER 7/64 RD
710-16008- 100	00 FEED FINGER 1/8 RD
710-16009- 100	00 FEED FINGER 9/64 RD
710-16010- 100	00 FEED FINGER 5/32 RD
710-16011- 100	00 FEED FINGER 11/64 RD
710-16012- 100	00 FEED FINGER 3/16 RD
710-16013- 100	00 FEED FINGER 13/64 RD
710-16014- 100	00 FEED FINGER 7/32 RD
710-16015- 100	00 FEED FINGER 15/64 RD
710-16016- 100	00 FEED FINGER 1/4 RD
710-16017- 100	00 FEED FINGER 17/64 RD
710-16019- 100	00 FEED FINGER 19/64 RD
710-16020- 100	00 FEED FINGER 5/16 RD
710-17008- 100	00 FEED FINGER 3/32 1/8 SQ
710-17012- 100	00 FEED FINGER 5/32 3/16
710-17014- 100	00 FEED FINGER 3/16 7/32
710-18012- 100	00 FEED FINGER 5/32 3/16
710-18016- 100	00 FEED FINGER 7/32 1/4 HX
FEEDING FINGER #00A	
710-16024- 200	00A FEED FINGER 3/8 RD
710-17016- 200	00A FEED FINGER 7/32 1/4 SQ
710-18020- 200	00A FEED FING 9/32 5/16RD
FEEDING FINGER #10	
710-16004- 110	10 FEED FINGER 1/16 RD
710-16005- 110	10 FEED FINGER 5/64 RD
710-16006- 110	10 FEED FINGER 3/32 RD
710-16007- 110	10 FEED FINGER 7/64 RD
710-16008- 110	10 FEED FINGER 1/8 RD
710-16009- 110	10 FEED FINGER 9/64 RD
710-16010- 110	10 FEED FINGER 5/32 RD
710-16011- 110	10 FEED FINGER 11/64 RD
710-16012- 110	10 FEED FINGER 3/16 RD
710-16013- 110	10 FEED FINGER 13/64 RD
710-16014- 110	10 FEED FINGER 7/32 RD
710-16015- 110	10 FEED FINGER 15/64 RD
710-16016- 110	10 FEED FINGER 1/4 RD
710-16017- 110	10 FEED FINGER 17/64 RD
710-16018- 110	10 FEED FINGER 9/32 RD
710-16019- 110	10 FEED FINGER 19/64 RD
710-16020- 110	10 FEED FINGER 5/16 RD
710-16021- 110	10 FEED FINGER 21/64 RD
710-16022- 110	10 FEED FINGER 11/32 RD

Tool No.	Description
710-16023- 110	10 FEED FINGER 23/64 RD
710-16024- 110	10 FEED FINGER 3/8 RD
710-17008- 110	10 FEED FINGER 3/32 1/8 SQ
710-17012- 110	10 FEED FINGER 5/32 3/16SQ
710-17016- 110	10 FEED FINGER 7/32 1/4 SQ
710-18012- 110	10 FEED FINGER 5/32 3/16HX
710-18016- 110	10 FEED FINGER 7/32 1/4 HX
710-18020- 110	10 FEED FINGER 9/32 5/16HX
FEEDING FINGER #10A	
710-16025- 210	10A FEED FINGER 25/64 RD
710-16026- 210	10A FEED FINGER 13/32 RD
710-16027- 210	10A FEED FINGER 27/64 RD
710-16028- 210	10A FEED FINGER 7/16 RD
710-16029- 210	10A FEED FINGER 29/64 RD
710-16030- 210	10A FEED FINGER 15/32 RD
710-16031- 210	10A FEED FINGER 31/64 RD
710-16032- 210	10A FEED FINGER 1/2 RD
710-17020- 210	10A FEED FING 9/32 5/16SQ
710-18024- 210	10A FEED FING 11/32 3/8HX
710-18028- 210	10A FEED FINGER 7/16 HX
FEEDING FINGER #10AA	
710-16033- 310	10AA FEED FING 33/64 RD
710-16034- 310	10AA FEED FINGER 17/32 RD
710-16035- 310	10AA FEED FINGER 35/64 RD
710-16036- 310	10AA FEED FINGER 9/16 RD
710-16037- 310	10AA FEED FINGER 37/64 RD
710-16038- 310	10AA FEED FINGER 19/32 RD
710-16039- 310	10AA FEED FINGER 39/64 RD
710-16040- 310	10AA FEED FINGER 5/8 RD
710-16042- 310	10AA FEED FINGER 21/32 RD
710-16044- 310	10AA FEED FINGER 11/16 RD
710-16046- 310	10AA FEED FINGER 23/32 RD
710-16048- 310	10AA FEED FINGER 3/4 RD
710-17024- 310	10AA FEED FING 11/32 3/8S
710-17028- 310	10AA FEED FINGER 7/16 SQ
710-17032- 310	10AA FEED FINGER 1/2 SQ
710-18032- 310	10AA FEED FINGER 1/2 HX
710-18036- 310	10AA FEED FINGER 9/16 HX
710-18040- 310	10AA FEED FING 19/32 5/8H
FEEDING FINGER #11	
710-16025- 111	11 FEED FINGER 25/64 RD
710-16026- 111	11 FEED FINGER 13/32 RD
710-16027- 111	11 FEED FINGER 27/64 RD
710-16028- 111	11 FEED FINGER 7/16 RD

FEEDING FINGERS

Tool No.	Description
710-16029- 111	11 FEED FINGER 29/64 RD
710-16030- 111	11 FEED FINGER 15/32 RD
710-16031- 111	11 FEED FINGER 31/64 RD
710-16032- 111	11 FEED FINGER 1/2 RD
710-17020- 111	11 FEED FINGER 9/32 5/16 SQ
710-17024- 111	11 FEED FINGER 11/32 3/8 SQ
710-18024- 111	11 FEED FINGER 11/32 3/8 HX
710-18028- 111	11 FEED FING 13/32 7/16HX

FEEDING FINGER #11A

710-16033- 211	11A FEED FINGER 33/64 RD
710-16034- 211	11A FEED FINGER 17/32 RD
710-16035- 211	11A FEED FINGER 35/64 RD
710-16036- 211	11A FEED FINGER 9/16 RD
710-16037- 211	11A FEED FINGER 37/64 RD
710-16038- 211	11A FEED FINGER 19/32 RD
710-16039- 211	11A FEED FINGER 39/64 RD
710-16040- 211	11A FEED FINGER 5/8 RD
710-18032- 211	11A FEED FING 15/32 1/2HX

FEEDING FINGER #11AA

710-16025- 411	11AA FEED FINGER 25/64 RD
710-16026- 411	11AA FEED FINGER 13/32 RD
710-16027- 411	11AA FEED FINGER 27/64 RD
710-16028- 411	11AA FEED FINGER 7/16 RD
710-16029- 411	11AA FEED FINGER 29/64 RD
710-16030- 411	11AA FEED FINGER 15/32 RD
710-16031- 411	11AA FEED FINGER 31/64 RD
710-16032- 411	11AA FEED FINGER 1/2 RD
710-16033- 411	11AA FEED FINGER 33/64 RD
710-16034- 411	11AA FEED FINGER 17/32 RD
710-16035- 411	11AA FEED FINGER 35/64 RD
710-16036- 411	11AA FEED FINGER 9/16 RD
710-16037- 411	11AA FEED FINGER 37/64 RD
710-16038- 411	11AA FEED FINGER 19/32 RD
710-16039- 411	11AA FEED FINGER 39/64 RD
710-16040- 411	11AA FEED FINGER 5/8 RD
710-17020- 411	11AA FEED FINGER 5/16 SQ
710-17024- 411	11AA FEED FINGER 3/8 SQ
710-17028- 411	11AA FEED FINGER 7/16 SQ
710-18024- 411	11AA FEED FING 11/32 3/8H
710-18028- 411	11AA FD FINGER13/32 7/16H
710-18032- 411	11AA FEED FING 15/32 1/2H

FEEDING FINGER #21A

710-16042- 221	21A FEED FINGER 21/32 RD
710-16044- 221	21A FEED FINGER 11/16 RD
710-16046- 221	21A FEED FINGER 23/32 RD
710-16048- 221	21A FEED FINGER 3/4 RD
710-17032- 221	21A FEED FINGER 1/2 SQ
710-18036- 221	21A FEED FING 17/32 9/16H
710-18040- 221	21A FEED FING 19/32 5/8HX

FEEDING FINGER #22

710-16041- 122	22 FEED FINGER 41/64 RD
710-16042- 122	22 FEED FINGER 21/32 RD
710-16043- 122	22 FEED FINGER 43/64 RD
710-16044- 122	22 FEED FINGER 11/16 RD
710-16045- 122	22 FEED FINGER 45/64 RD
710-16046- 122	22 FEED FINGER 23/32 RD
710-16047- 122	22 FEED FINGER 47/64 RD
710-16048- 122	22 FEED FINGER 3/4 RD
710-16049- 122	22 FEED FINGER 49/64 RD
710-16050- 122	22 FEED FINGER 25/32 RD
710-16051- 122	22 FEED FINGER 51/64 RD
710-16052- 122	22 FEED FINGER 13/16 RD
710-16053- 122	22 FEED FINGER 53/64 RD
710-16054- 122	22 FEED FINGER 27/32 RD
710-16055- 122	22 FEED FINGER 55/64 RD
710-16056- 122	22 FEED FINGER 7/8 RD
710-16057- 122	22 FEED FINGER 57/64 RD
710-16058- 122	22 FEED FINGER 29/32 RD
710-16059- 122	22 FEED FINGER 59/64 RD
710-16060- 122	22 FEED FINGER 15/16 RD
710-16061- 122	22 FEED FINGER 61/64 RD
710-16062- 122	22 FEED FINGER 31/32 RD
710-16063- 122	22 FEED FINGER 63/64 RD
710-16064- 122	22 FEED FINGER 1 RD
710-17032- 122	22 FEED FINGER 1/2 SQ
710-17036- 122	22 FEED FINGER 9/16 SQ
710-17040- 122	22 FEED FINGER 5/8 SQ
710-17044- 122	22 FEED FINGER 11/16 SQ
710-18036- 122	22 FEED FING 17/32 9/16HX
710-18040- 122	22 FEED FINGER 19/32 5/8 HX
710-18044- 122	22 FEED FINGER 21/32 11/16H
710-18048- 122	22 FEED FINGER 23/32 3/4 HX
710-18052- 122	22 FEED FINGER 25/32 13/16H
710-18056- 122	22 FEED FINGER 27/32 7/8 HX

FEEDING FINGER #22D

710-16120- 322	22D FEED FINGER 1 5/16 RD
710-16124- 322	22D FEED FINGER 1 3/8 RD
710-16128- 322	22D FEED FINGER 1 7/16 RD
710-16132- 322	22D FEED FINGER 1 1/2 RD
710-17064- 322	22D FEED FINGER 1 SQ
710-18108- 322	22D FEED FINGER 1 1/8 HX

Tool No.	Description
710-18112- 322	22D FEED FINGER 1 3/16 HX
710-18116- 322	22D FEED FINGER 1 1/4 HX

FEEDING FINGER #22DD

710-16136- 522	22DD FEED FINGER 1 9/16 RD
710-16140- 522	22DD FEED FINGER 1 5/8 RD
710-17104- 522	22DD FEED FINGER 1 1/16 SQ
710-17108- 522	22DD FEED FINGER 1 1/8 SQ
710-18120- 522	22DD FEED FINGER 1 5/16 HX
710-18124- 522	22DD FEED FINGER 1 3/8 HX

FEEDING FINGER #22H

710-16102- 422	22H FEED FINGER 1 1/32 RD
710-16104- 422	22H FEED FINGER 1 1/16 RD
710-16106- 422	22H FEED FINGER 1 3/32 RD
710-16108- 422	22H FEED FINGER 1 1/8 RD
710-16110- 422	22H FEED FINGER 1 5/32 RD
710-16112- 422	22H FEED FINGER 1 3/16 RD
710-16114- 422	22H FEED FINGER 1 7/32 RD
710-16116- 422	22H FEED FINGER 1 1/4 RD
710-17048- 422	22H FEED FINGER 3/4 SQ
710-17052- 422	22H FEED FINGER 13/16 SQ
710-17056- 422	22H FEED FINGER 7/8 SQ
710-18060- 422	22H FEED FINGER 15/16HX
710-18104- 422	22H FEED FINGER 1 11/16 HX

FEEDING FINGER #23

710-16136- 123	23 FEED FINGER 1 9/16 RD
710-16140- 123	23 FEED FINGER 1 5/8 RD
710-16144- 123	23 FEED FINGER 1 11/16 RD
710-16148- 123	23 FEED FINGER 1 3/4 RD
710-16152- 123	23 FEED FINGER 1 13/16 RD
710-16156- 123	23 FEED FINGER 1 7/8 RD
710-16160- 123	23 FEED FINGER 1 15/16 RD
710-16164- 123	23 FEED FINGER 2 RD
710-17116- 123	23 FEED FINGER 1 1/4 SQ
710-17124- 123	23 FEED FINGER 1 3/8 SQ
710-18128- 123	23 FEED FINGER 1 7/16 HX
710-18132- 123	23 FEED FINGER 1 1/2 HX
710-18136- 123	23 FEED FINGER 1 9/16 HX
710-18140- 123	23 FEED FINGER 1 5/8 HX
710-18144- 123	23 FEED FINGER 1 11/16 HX
710-18148- 123	23 FEED FINGER 1 3/4 HX

FEEDING FINGER #23INVERTED

710-16204- 223	23 INVERT FF 2 1/16RD
710-16208- 223	23 INVERT FF 2 1/8RD
710-16212- 223	23 INVERT FF 2 3/16RD
710-16216- 223	23 INVERT FF 2 1/4RD

Tool No.	Description
710-16220- 223	23 INVERT FF 2 5/16RD
710-16224- 223	23 INVERT FF 2 3/8 RD
710-17132- 223	23 INVERT FF 1 1/2SQ
710-17140- 223	23 INVERT FF 1 5/8SQ
710-18152- 223	23 INVERT FF 1 13/16HX
710-18156- 223	23 INVERT FF 1 7/8HX
710-18160- 223	23 INVERT FF 1 15/16HX
710-18164- 223	23 INVERT FF 2 HX

FEEDING FINGER #27

710-16204- 127	27 FEED FINGER 2 1/16 RD
710-16208- 127	27 FEED FINGER 2 1/8 RD
710-16212- 127	27 FEED FINGER 2 3/16RD
710-16216- 127	27 FEED FINGER 2 1/4 RD
710-16220- 127	27 FEED FINGER 2 5/16 RD
710-16224- 127	27 FEED FINGER 2 3/8 RD
710-17132- 127	27 FEED FINGER 1 1/2 SQ
710-17140- 127	27 FEED FINGER 1 5/8 SQ
710-18152- 127	27 FEED FINGER 1 13/16 HX
710-18156- 127	27 FEED FINGER 1 7/8 HX
710-18160- 127	27 FEED FINGER 1 15/16 HX
710-18200- 127	27 FEED FINGER 2 HX

MASTER FEED FINGER

710-26020- 100	00M MASTER FEED FINGER
710-26024- 110	10M MASTER FEED FINGER
710-26032- 111	11M MASTER FEED FINGER
710-26056- 122	22M MASTER FEED FINGER
710-21148- 126	26M MASTER FEED FINGER
710-26028- 210	10AM MASTER FEED FINGER
710-26036- 211	11AM MASTER FEED FINGER

MASTER FEED FINGER PADS (STEEL)

710-36224-226	26MD MASTER PAD 2 3/8 RD

NYLON FEEDING FINGER PADS

B & S Nylon Feeding Finger Pads feed stock without scratching or marking it in any way. They are the least expensive for all-around use — the best pads for feeding soft materials such as brass, aluminum, and plastics — and for centerless ground or polished stock where freedom from marking is particularly important. They grip better and last longer than common "scratch resistant" pads.

For 00M Master Feeding Finger

Size	Tool No. Set of 2 Pads
Round	
1/16"	**710-56004-100**
5/64"	**710-56005-100**
3/32"	**710-56006-100**
7/64"	**710-56007-100**
1/8"	**710-56008-100**
9/64"	**710-56009-100**
5/32"	**710-56010-100**
11/64"	**710-56011-100**
3/16"	**710-56012-100**
13/64"	**710-56013-100**
7/32"	**710-56014-100**
15/64"	**710-56015-100**
1/4"	**710-56016-100**
17/64"	**710-56017-100**
9/32"	**710-56018-100**
Square	
1/8"	**710-57008-100**
3/16"	**710-57012-100**
Hexagonal	
1/8"	**710-58008-100**
3/16"	**710-58012-100**

For 10M Master Feeding Finger

Size	Tool No. Set of 2 Pads
Round	
1/16"	**710-56004-110**
5/64"	**710-56005-110**
3/32"	**710-56006-110**
7/64"	**710-56007-110**
1/8"	**710-56008-110**
9/64"	**710-56009-110**
5/32"	**710-56010-110**
11/64"	**710-56011-110**
3/16"	**710-56012-110**
13/64"	**710-56013-110**
7/32"	**710-56014-110**
15/64"	**710-56015-110**
1/4"	**710-56016-110**
17/64"	**710-56017-110**
9/32"	**710-56018-110**
19/64"	**710-56019-110**
5/16	**710-56020-110**
21/64"	**710-56021-110**
11/32"	**710-56022-110**
23/64"	**710-56023-110**
3/8"	**710-56024-110**
Square	
1/8"	**710-57008-110**
5/32"	**710-57010-110**
3/16"	**710-57012-110**
7/32"	**710-57014-110**
1/4"	**710-57016-110**
Hexagonal	
1/8"	**710-58008-110**
5/32"	**710-58010-110**
3/16"	**710-58012-110**
7/32"	**710-58014-110**
1/4"	**710-58016-110**
9/32"	**710-58018-110**
5/16"	**710-58020-110**

For 11M Master Feeding Finger

Size	Tool No. Set of 2 Pads
Round	
25/64"	**710-56025-111**
13/32"	**710-56026-111**
27/64"	**710-56027-111**
7/16"	**710-56028-111**
29/64"	**710-56029-111**
15/32"	**710-56030-111**
31/64"	**710-56031-111**
1/2"	**710-56032-111**
Square	
5/16"	**710-57020-111**
Hexagonal	
3/8"	**710-58024-111**

For 22M Master Feeding Finger

Size	Tool No. Set of 2 Pads
Round	
17/32"	**710-56034-122**
9/16"	**710-56036-122**
19/32"	**710-56038-122**
5/8"	**710-56040-122**
21/32"	**710-56042-122**
11/16"	**710-56044-122**
23/32"	**710-56046-122**
3/4"	**710-56048-122**
Square	
3/8"	**710-57024-122**
7/16"	**710-57028-122**
1/2"	**710-57032-122**
Hexagonal	
7/16"	**710-58028-122**
1/2"	**710-58032-122**
9/16"	**710-58036-122**
5/8"	**710-58040-122**

For Steel Pads, see page 20.

FEEDING FINGER ADAPTERS

Adaptor No.	Reduction From	Reduction To	External L.H. Thread	Internal L.H. Thread	Tool No.
00	10	00	9/16-20	.417-32	**711-5-100**
10A-00	10A	00	5/8-32	.417-32	**711-5-210**
10A-10	10A	10	5/8-32	9/16-20	**711-5-310**
10A	*	*	5/8-32	5/8-32	**711-5-110**
10AA-10	10AA	10	7/8-32	9/16-20	**711-5-410**
10AA-10A	10AA	10A	7/8-32	5/8-32	**711-5-510**
11-10	21	10	13/16-20	9/16-20	**711-5-111**
11-11A-11AA	21	11A or 11AA	13/16-20	13/16-20	**711-5-211**
20A-10	11	10	11/16-20	9/16-20	**711-5-120**
20-11	11A	11	13/16-20	11/16-20	**711-5-320**
20-11A-11AA	*	*	13/16-20	13/16-20	**711-5-420**
21A-10	21A	10	15/16-20	9/16-20	**711-5-121**
21A-11	21A	11	15/16-20	11/16-20	**711-5-321**
21A-11A-11AA	21A	11A or 11AA	15/16-20	13/16-20	**711-5-221**
22-10	22	10	1-3/16-20	9/16-20	**711-5-122**
22-11	22	11	1-3/16-20	11/16-20	**711-5-1222**
22-11A-11AA	22	11A or 11AA	1-3/16-20	13/16-20	**711-5-222**
22H-10	22H	10	1-7/16-20	9/16-20	**711-5-622**
22H-11	22H	11	1-7/16-20	11/16-20	**711-5-1322**
22H-11A-11AA	22H	11AA	1-7/16-20	13/16-20	**711-5-722**
22H-22	22H	22	1-7/16-20	1-3/16-20	**711-5-822**
22H	*	*	1-7/16-20	1-7/16-20	**711-5-522**
22D-10	22D	10	1-11/16-20	9/16-20	**711-5-922**
22D-11A-11AA	22D	11A or 11AA	1-11/16-20	13/16-20	**711-5-1022**
22D-22	22D	22	1-11/16-20	1-3/16-20	**711-5-322**

Continued on next page...

Tables for selecting Adapters are on pages 3 through 7.

B&S

...Continued from previous page

Adaptor No.	Reduction From	Reduction To	External L.H. Thread	Internal L.H. Thread	Tool No.
22D-22H	22D	22H	1-11/16-20	1-7/16-20	**711-5-422**
22DD-10	22DD	10	1-13/16-20	9/16-20	**711-5-1422**
22DD-11AA	22DD	11AA	1-13/16-20	13/16-20	**711-5-1522**
22DD-22	22DD	22	1-13/16-20	1-3/16-20	**711-5-1622**
22DD-22D	22DD	22D	1-13/16-20	1-11/16-20	**711-5-1822**
22DD-22H	22DD	22H	1-13/16-20	1-7/16-20	**711-5-1722**
23	*	**	2-1/4-20	2-1/4-20	**711-5-423**
23-22	23	22	2-1/4-20	1-13/16-20	**711-5-123**
23-22H	23	22H	2-1/4-20	1-7/16-20	**711-5-223**
23-22D	23	22D	2-1/4-20	1-11/16-20	**711-5-323**
23-22DD	23	22DD	2-1/4-20	1-13/16-20	**711-5-523**
27-11A/11AA	27	11A or 11AA	M68X1.5	13/16-20	**711-5-827**
27-23	27	23	M68X1.5	2-1/4-20	**711-5-227**
27-22DD	27	22D	M68X1.5	1-11/16-20	**711-5-327**
27-22H	27	22H	M68X1.5	1-7/16-20	**711-5-427**
27-22	27	22	M68X1.5	1-3/16-20	**711-5-527**
27-22DD	27	22DD	M68X1.5	1-13/16-20	**711-5-627**

** Feed tube extension only; no reduction.*
Tables for selecting Adapters on pages 3 through 7.

FEED TUBE BUSHINGS

Feed Tube Bushings are used in the rear end of feed tubes to steady and support the stock. They prevent stock from whipping in the feed tube, increasing the life of the feed tube and the feeding finger. They are installed easily in the feed tube by removing the nut on the end of the tube.

Bushings are recommended for use with all types of stock, hex, square as well as round. The round I.D. bushings also work well with hex and square stock.

No. 00 Round

For Nos. 00 & 00G Auto. and Nos. 00 & 00G Auto. Screw Threading (Commencing Serial No. 13182).
For Auto. Screw Threading (Commencing Serial No. 500.)
For Auto. Cutting-Off (Opposed Spindle Type.)
For Auto. Pinion Turning (1/4" max.)
For No. 00 Hand Screw.

*Size	Tool No.
1/8"	**711-1002-100**
1/4"	**711-1004-100**
3/8"	**711-1006-100**
1/2"	**711-1008-100**

No. 22A Round

For Nos. 2 & 2G Auto. (Commencing Serial No. 9084) with 1-1/2" capacity spindle.

*Size	Tool No.
1"	**711-1016-222**
1-1/2"	**711-1024-222**

No. 27 Round

*Size	Tool No.
2-1/8"	**711-1034-127**
2-1/4"	**711-1036-127**
2-3/8"	**711-1038-127**

No. 20 Round

For No. 00 Auto. 3/4" capacity.
For Nos. 0 & 0G Auto. (Commencing Serial No. 8021.)
For No. 0 Hand Screw and No. 2 with 3/4" capacity spindle.

*Size	Tool No.
1/4"	**711-1004-120**
3/8"	**711-1006-120**
1/2"	**711-1008-120**
5/8"	**711-1010-120**
3/4"	**711-1012-120**

* *Sizes shown are stock size, not bushing hole size. Holes for bushings are slightly larger.*

Continued on next page...

...Continued from previous page

No. 22B Round

For No. 2 Ultramatic, 1-5/8" cap.

*Size	Tool No.
1/2"	**711-1008-322**
5/8"	**711-1010-322**
3/4"	**711-1012-322**
7/8"	**711-1014-322**
1-1/8"	**711-1018-322**
1-1/4"	**711-1020-322**
1-3/8"	**711-1022-322**
1-1/2"	**711-1024-322**
1-5/8"	**711-1026-322**

No. 22 Round

For Nos. 2 & 2G Auto. (Commencing Serial No.7352.)

For No. 2 Hand Screw.

*Size	Tool No.
3/4"	**711-1012-122**
1"	**711-1016-122**
1-1/8"	**711-1018-122**
1-1/4"	**711-1020-122**

No. 26 Round

For No. 4 Auto. (Commencing Serial No. 542-4-1.)

For No. 3 Auto. with 2 3/8" capacity spindle.

*Size	Tool No.
5/8"	**711-1010-126**
3/4"	**711-1012-126**
7/8"	**711-1014-126**
1"	**711-1016-126**
1-1/8"	**711-1018-126**
1-1/4"	**711-1020-126**
1-3/8"	**711-1022-126**
1-1/2"	**711-1024-126**
1-5/8"	**711-1026-126**
1-3/4"	**711-1028-126**
1-7/8"	**711-1030-126**
2"	**711-1032-126**

* *Sizes shown are stock size, not bushing hole size. Holes for bushings are slightly larger.*

BOX TOOLS WITH CARBIDE "V" RESTS

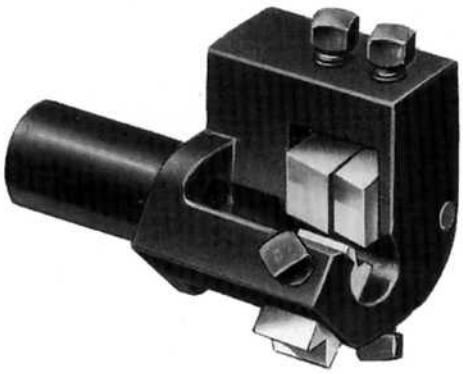

Provide Superior Finishes — Hold Close Tolerances!

Nos. 45 and 46 Box Tools are designed primarily for light finishing cuts where fine finishes and close tolerances are required. They are used also for general work, particularly on brass and aluminum.

These tools have carbide back rests which greatly extend their wear-life. Rests are adjustable to work on any diameter within the capacity of the tool.

Tool Nos. ending 322, 500 and 620 are arranged to hold a center drill or centering tool in the shank, clamped in position by a set screw. Tool Nos. 711-45-322 and 711-46-322 are equipped with two hardened blades; all the others have one hardened blade.

Shank Diameter	Shank Length	Turning Capacity (Inch) Diameter	Tool No.
No. 45 Box Tools — Right Hand			
5/8	*	up to 3/16	**711-45-400**
5/8	5/8	from 1/4 to 1/2	
	*	up to 1/4	**711-45-500 †**
3/4	3/4	from 5/16 to 5/8	
	*	up to 5/16	**711-45-620**
1	2	from 7/16 to 5/8	
	*	from 3/16 to 7/16	**711-45-322**
No. 46 Box Tools — Left Hand			
5/8	1	from 5/16 to 1/2	
	*	up to 5/16	**711-46-400**
1	2	from 7/16 to 5/8	
	*	from 3/16 to 7/16	**711-46-322**

**Turned diameter will pass through shank bore.*
†Furnished with Center Drill

See page 116 for Turning Tool Blades.

Continued on next page...

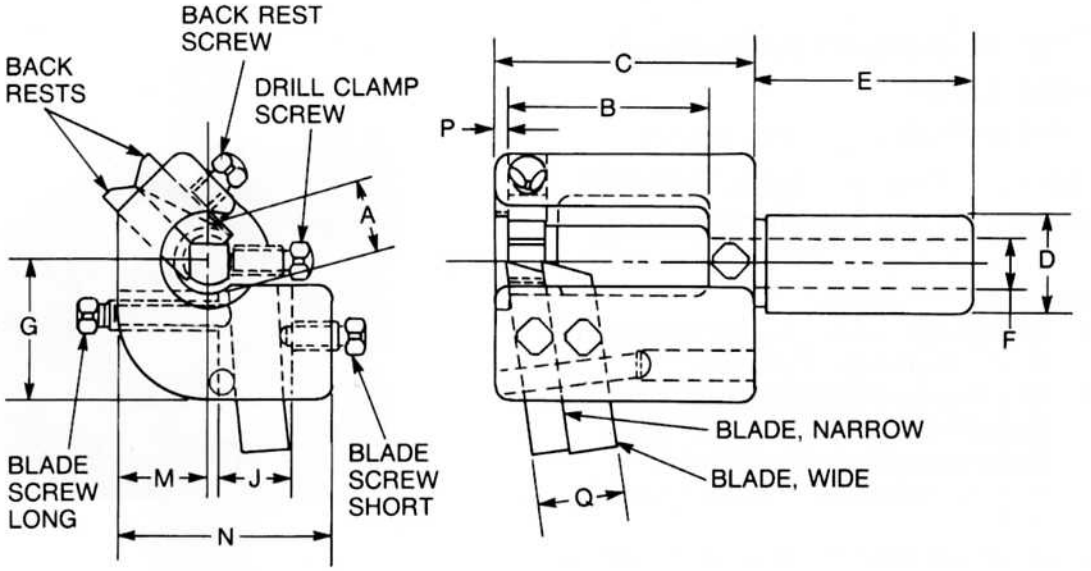

Tool No.	A	B	C	D	E	F	G	J	M	N	P	Q	Blades
	Inches												
No. 45 Box Tools													
45-400	5/16	17/32	3/4	5/8	2	5/16	3/4	3/8	13/32	1-1/32	3/32	5/16	1/4 x 5/16"
45-500	9/16	5/8	1-3/8	5/8	1-3/8	5/16	1	19/32	5/8	1-1/2	1/8	1/4	1/4 x 3/8"
45-620	11/16	11/16	1-1/4	3/4	1-1/2	3/8	1-1/8	11/16	7/8	2	1/8	1/2	1/4 x 3/8"
45-322	11/16	2-1/16	2-5/8	1	2-1/4	1/2	1-7/16	3/4	15/16	2-3/16	1/8	7/8	3/8 x 3/8" 3/8 x 1/2"
No. 46 Box Tools													
46-400	9/16	1-1/16	1-3/8	5/8	1-3/8	3/8	1	9/16	5/8	1-1/2	1/8	5/8	1/4 x 3/8" 3/8 x 3/8"
46-322	11/16	2-1/16	2-5/8	1	2-1/4	1/2	1-7/16	3/4	15/16	2-3/16	1/8	7/8	3/8 x 1/2" 1/2 x 1/2"

Tool No.	711-45-400	711-45-500	711-45-620	711-45-322	711-46-322	711-46-400
Back Rest	211-93003-1	211-93002-1	211-93001-1	211-93008-1	211-93008-1	211-93002-1
Back Rest Scr.	92-5191-610	92-5012-812	92-5012-1016	92-5012-1012	92-5012-1012	92-5012-812
Blade Screw-L	92-5191-616	92-5191-828	92-5191-1032	211-4509	211-4509	92-5191-824
Blade Screw-S	92-5191-612	92-5191-814	92-5191-1016	92-5191-1016	92-5191-1016	92-5191-814
Drill Clamp Scr.	NONE	92-5012-812	92-5012-1016	92-5012-1020	92-5012-1020	NONE
Center Drill	NONE	211-96001	NONE	NONE	NONE	NONE
Body	211-4501-2	211-4502	211-4505	211-4507	211-4604	211-4602
Blade	711-94075	711-94076	711-94085	711-94085	711-94085	711-94076
Blade-Wide	NONE	NONE	NONE	NONE	711-94092	711-94083

ROLLER BACK BOX TOOLS AND BALANCE TURNING TOOLS

Designed to be Faster, Better Than Ever!
Now with straight line movement — interchangeable blade blocks — instant blade setting.

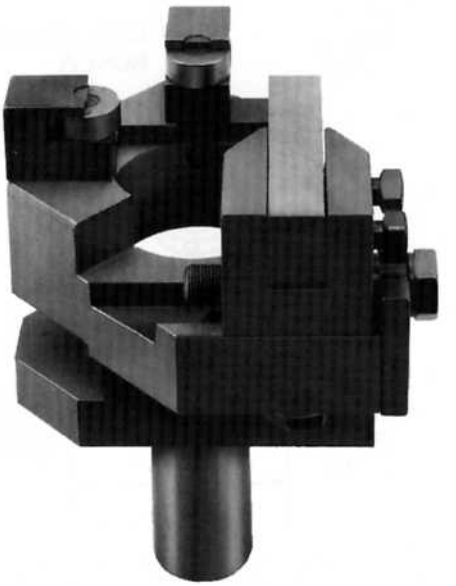

Features

- **Unique one-piece gage for setting all blades on center - Instantly.**
- **Interchangeable blade blocks used on balance turning & roller back box tools- same blade block fits left or right hand balance or roller back tools.**
- **Same roll block can be used for left or right, upper or lower support on roller back tools - new screw adjustment on roll blocks.**
- **Interchangeable fine pitch adjusting screws for right hand, left hand, balance turning and roller back.**
- **Interchangeable retainers for right hand, left hand, balance turning and roller back.**

We have eliminated the time consuming trial and error required when you set other balance turning tools. One setting gage is all you need to instantly center the blades.

ROLLER BACK BOX TOOLS AND BALANCE TURNING TOOLS

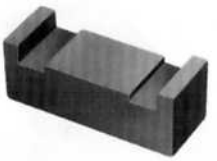

Features

- **Use same setting techniques for left-hand or right-hand tools.**
- **One clearance angle for all blades.**
- **Interchange blade holders; center blades in hand, on the machine, at the bench.**

One Setting Gage accurately and instantly centers all blades on right and left hand tools, mechanically, simply, without further calculation, with repeatability from blade to blade, block to block.

Once centered, these new tools permit setting throughout the entire range of the machine's capacity, utilizing straight-line slides instead of the old, limited capacity rockers.

The Old Way

Conventional tooling requires time consuming measuring procedures for blade centering. After measuring, centering was "proofed" by hand-working the turret to scribe a blade mark along the work-piece diameter. Blade centering was determined by one of the most time consuming procedures known - trial and error.

The New Way

The new tools utilize a solid, one piece steel centering gage for instant, and correct, blade centering - man to man - tool to tool - right or left. Simply place the gage on any blade block in the system and extend the blade to the gage size and lock it up. The blade block itself provides a permanent reference and the system is so fool-proof that accurate centering can even be made with complete confidence — on the bench — or on the machine — or in the palm of your hand — anywhere.

For tool specifications, see pages 36 to 41.

ROLLER BACK BOX TOOLS

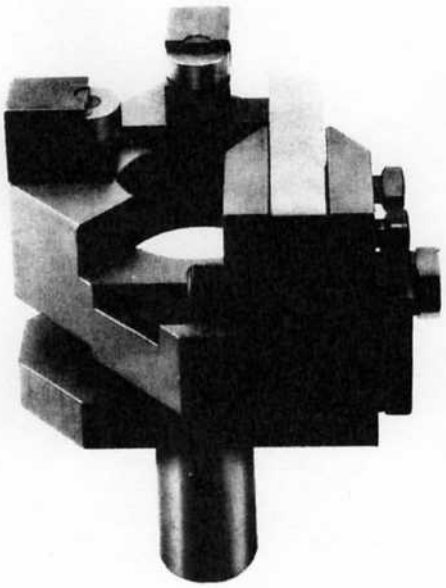

Blade block slides permit straight line setting over the entire range of machine capacity without changing blade clearance angle. Blade centering is with a one piece steel setting gage. Blade blocks are interchangeable for use with left-hand or right-hand tools and for use with Balance Turning Tools. Roll blades are interchangeable for use with left-hand or right-hand tools and for upper or lower support. New, interchangeable fine-adjust screw and new blade block retainers are now standard, and may be used with new Balance Turning Tools as well as the new Roller Back Box Tools. Extended Roll Holders and a full line of straight and tapered rolls are also available.

New Series Roller Back Box Tools

Furnished with one blade and two roller back rests.

Tool No.	Shank Dia.	Turning Length	RH & LH Capacity Diameter	Right or Left Hand Operation	Replaces These Old Tools
711-51-200	5/8"	*	.090" to .340"†	Right Hand	711-51-100
		1-1/4"	.340" to .625"		
711-52-200	5/8"	*	.090" to .340"†	Left Hand	711-52-100
		1-1/4"	.340" to .625"		
711-51-420	3/4"	*	.180" to .380"	Right Hand	711-51-320
		2"	.380" to .625"		
711-51-422	1"	*	.560" to .625"	Right Hand	711-51-322
		2-1/2"	.625" to 1-1/2"		
711-52-322	1"	*	.560" to .625"	Left Hand	711-52-222
		2-1/2"	.625" to 1-1/2"		
711-53-222	1"	*	.185" to .625"	Right Hand	711-53-122
		2-3/8"	.625" to .750"		
711-54-222	1"	*	.185" to .625"	Left Hand	711-54-122
		2-3/8"	.625" to .750"		

* *Turned diameter will pass through shank bore.*

† *For Diameters below .125", use Roll Holders no. 211-5139-1.*
See page 38 for Extended Roll Holders.
Right and Left hand Tools have the same capacity.

For additional blades, see page 116.

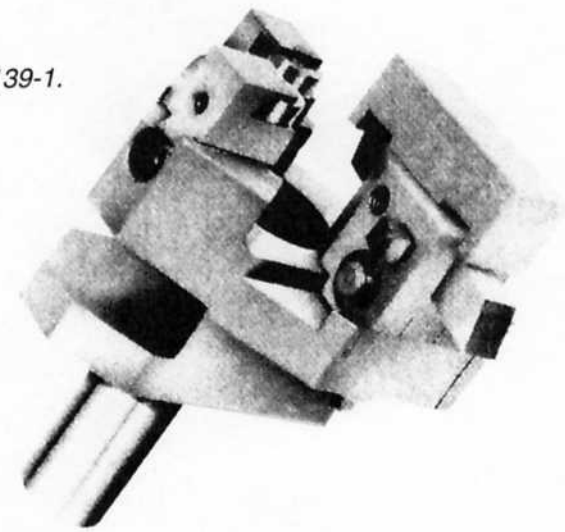

Setting Gages

Tools Used With	Tool No.
711-51-200, 711-52-200	**711-57-100**
711-53-222, 711-54-222, 711-51-420	**711-57-122**
711-52-422, 711-52-322	**711-57-123**

B&S

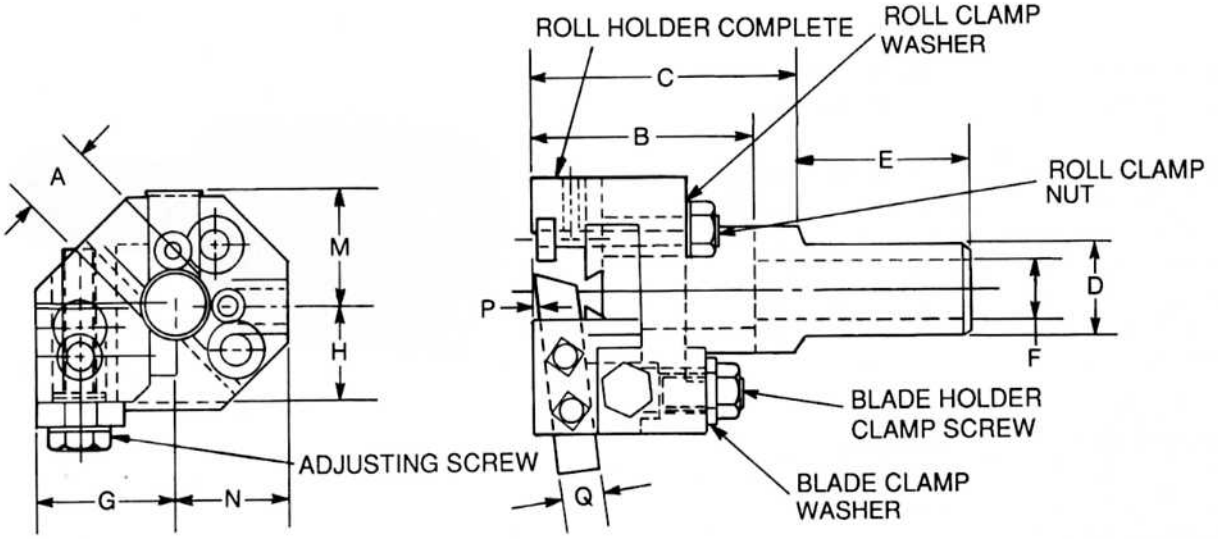

Tool No	A	B	C	D	E	F	G	J	M	N	P	Q	Blade Size
	Inches												
711-51-200	.69	1.37	1.52	.62	1.32	.38	1.30	.88	.88	.88	.04	.31	5/16 X 5/16
711-51-420	.69	2.07	2.32	.75	1.50	.44	1.60	1.10	1.21	1.21	.06	.44	7/16 X 7/16
711-51-422	1.56	2.66	2.16	1.00	2.00	.69	2.00	1.68	1.81	1.81	.10	.50	1/2 X 1/2
711-52-200	.69	1.37	1.52	.62	1.32	.38	1.30	.88	.88	.88	.04	.31	5/16 X 5/16
711-52-322	1.56	2.66	3.16	1.00	2.00	.69	2.00	1.68	1.81	1.81	.10	.50	1/2 X 1/2
711-53-222	.81	2.56	3.06	1.00	2.0	.69	1.62	1.12	1.28	1.28	.06	.44	7/16 X 7/16
711-54-222	.81	2.56	3.06	1.00	2.0	.69	1.62	1.12	1.28	1.28	.06	.44	7/16 X 7/16

Note: Turning length is unlimited when the workpiece will pass through the tool shank.

Tool No.	**711-51-200** **711-52-200**	**711-51-420**	**711-51-422** **711-52-322**	**711-53-222** **711-54-222**
Blade Clamp Scr.	92-5391-808	92-5012-1016	92-5012-1016	92-5012-1016
Blade Hold. Clamp Scr.	92-5035-816	92-5035-1220	92-5035-1220	92-5035-1220
Blade Clamp Washer	92-2040-802-18	92-2040-1202-24	92-2040-1204-28	92-2040-1204-24
Blade Holder	211-6018-1	211-5302-2	211-6020	211-5302-2
Adjusting Scr.	211-6024-1	211-6022	211-6022	211-6022
Adjusting Scr. Retainer	211-6023	211-6021	211-6021	211-6021
Retainer Screw	472-642	92-5385-612	92-5385-612	92-5385-612
Roll Holder Comp.	211-5139	211-5303	211-5141	211-5303
Roll	711-55-100	711-55-120	711-55-122	711-55-120
Roll Pin	211-5126	211-5127	211-5125	211-5127
Roll \Pin Set Screw	92-5390-608	92-5390-620	92-5390-620	92-5390-620
Roll Holder Clamp Bolt	211-5140-1	211-5304-1	211-5142	211-5304-1
Roll Clamp Nut	92-6015-810	92-6015-1017	92-6015-1214	92-6015-1017
Roll Holder Adj. Scr.	211-2703-1	211-37308-1	211-2706-2	211-37308-1
Roll Clamp Washer	92-2040-802-16	92-2040-1002-20	92-2040-1202-20	92-2040-1002-20
Body R.H.	211-5101-3	211-5102-4	211-5103-2	211-5301-2
Body L.H.	211-5201-3	NONE	211-5203-2	211-5401-2
Blade	711-94080	711-94093	711-94092	711-94093

EXTENDED ROLL HOLDERS

No. 44 Extended Roll Holders (Pairs)
For Roller Back Rests 00, 0 and 2 Sizes

When these holders are in operating position in the tool, the rolls are positioned ahead of the blade by approximately the thickness of the roll. This permits turning diameters concentrically with previously turned diameters. They are furnished in **pairs** complete with rolls and pins.

Tools Where Used	Tool No.
51-100 & 52-100	**711-44-100**
51-320 & 52-220 53-122 & 54-122	**711-44-120**
51-322 & 52-222	**711-44-122**

Extended Roll Holders (Pairs)
For Roller Box Tools

The same holders are used on both left and right hand tools. They are furnished in **pairs**. These holders permit turning diameters concentrically with previously turned diameters.

Tools Used With	Tool No.
51-200 & 52-200	**711-44-200**
51-420 & 53-222 & 54-222	**711-44-220**
51-422 & 52-322	**711-44-222**

Tool No.	711-44-100	711-44-120	711-44-122	711-44-200	711-44-220	711-44-222
Roll	711-55-100	711-55-120	711-55-122	711-55-100	711-55-120	711-55-122
Roll Pin	211-5126	211-5127	211-5125	211-5126	211-5127	211-5125
Set Screw	92-5390-608	92-5390-612	92-5390-620	92-5390-608	92-5390-620	92-5390-620

Tapered Rolls

Tool Size	O.D.	Width	Hole	Tool No.	Pin No.
00	5/16"	5/32"	1/8"	**711-56-100**	**211-5126**
0*†	7/16"	3/16"	3/16"	**711-56-120**	**211-5127**
2	5/8"	1/4"	1/4"	**711-56-122**	**211-5125**

Straight Rolls

Tool Size	O.D.	Width	Hole	Tool No.	Pin No.
00	5/16"	5/32"	1/8"	**711-55-100**	**211-5126**
0*†	7/16"	3/16"	3/16"	**711-55-120**	**211-5127**
2	5/8"	1/4"	1/4"	**711-55-122**	**211-5125**

** Used also on Box Tools Nos. 53-122, 53-222, 54-122, 54-222, 51-420.*
†For Box Tools only.

BALANCE TURNING TOOLS

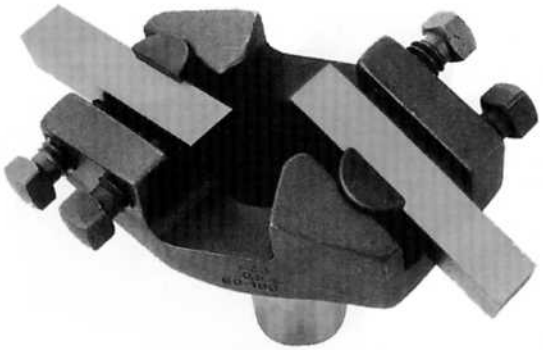

Balance Turning Tools are strong and free cutting. You need only one set of blades to turn all sizes within the capacity of the machine. The blades cut tangentially and are adjusted simply by swinging them up or down.

For finish turning or holding close tolerances, it is recommended that both blades be set to cut to finish size. This provides a truly balanced cut with each blade cutting to equal depth and removing an equal amount of stock. When set in this manner, the feed on each blade is one-half the feed of the turret, which means longer tool life and better control of tolerance and finish.

For rough turning, you can set one blade to the rough dimension while the other blade is set to the finished size. Two hardened blades are furnished.

No. 60 Balance Turning Tool — R. H.

Shank Dia.	Turning Capacity Length	Turning Capacity Diameter	Tool No.
5/8"	*	up to 11/32	**711-60-100**
	1"	11/32 to 1/2	

**Turned diameter will pass through shank bore.*
See page 116 for additional blades.

Tool No.	Blade Screw	Rocker	Body	Blade
711-60-100	92-5191-814	211-6014	211-6001-2	711-94075

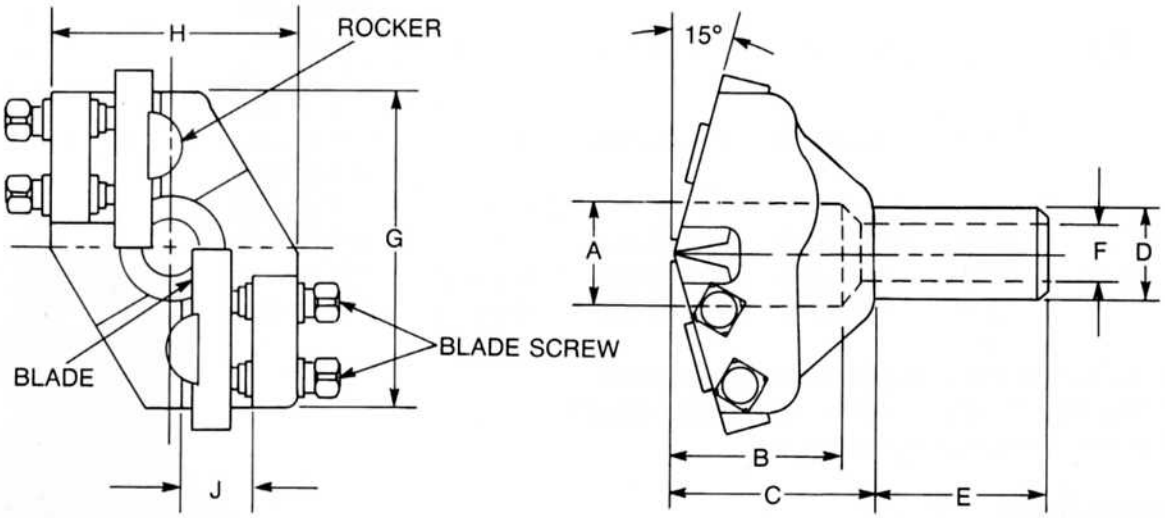

Tool No.	Inches A	B	C	D	E	F	G	H	J	Blades
711-60-100	11/16	1-1/8	1-5/16	5/8	1-1/8	3/8	2-1/8	1-5/8	9/16	1/4 X 5/16

Note: Turning length is unlimited when the workpiece will pass through the tool shank.

BALANCE TURNING TOOLS

With Instant Blade Setting

Blade block slides permit straight line diametral setting over the entire range of machine capacity without changing the blade clearance angle. You get instant blade setting with the one piece setting gage.

Blade blocks, blade block retainers and fine-adjust screws are totally interchangeable for use with right and left-hand tools and with Roller Back Box Tools. Set-up is faster, repeatability of settings is surer and machining performance is better. With the Balance Turning Tool you will achieve fine finishes, closer tolerances, and longer tool life.

When you are looking for a finished turn or when holding close tolerances, it is recommended that both blades be set to cut to the finished size. This will provide a truly balanced cut with each blade cutting to an equal depth and removing an equal amount of stock. This will give you longer tool life and better control of the tolerance and finish. If you are rough turning, one blade can be set to the rough dimension and the other blade set to the finished dimension.

Balance Turning Tools
Furnished with two Blades

Shank Dia.	Turning Length	Capacity Diameter	Tool No.	Right/Left Hand Operation *	Replaces (Old Number)
5/8	†	Up to .340	**711-60-300**	Right Hand	711-60-100 711-60-200 711-60-120 711-60-220
	1-1/4	.340 to .750	**711-61-300**	Left Hand	711-61-100 711-61-200
1	†	Up to .625	**711-60-322**	Right Hand	711-60-222 711-60-122
	2-3/4	.625 to 1.625	**711-61-322**	Left Hand	711-61-222
1-1/4	2-1/2	1.2 to 2.0	**711-60-223**	Right Hand	711-60-123
	1-3/16	2.0 to 2.4	**711-61-223**	Left Hand	711-61-123

† *Turned diameter will pass through shank bore.*
* *Right and Left Hand tools have the same capacity.*
For additional blades, see page 116.

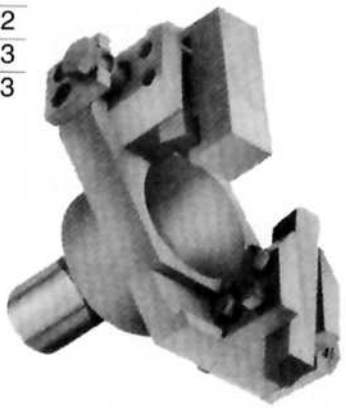

Setting Gages

Tools Used With	Tool No.
711-60-300, 711-61-300	**711-57-100**
711-60-223, 711-61-223	**711-57-123**
711-60-322, 711-61-322	

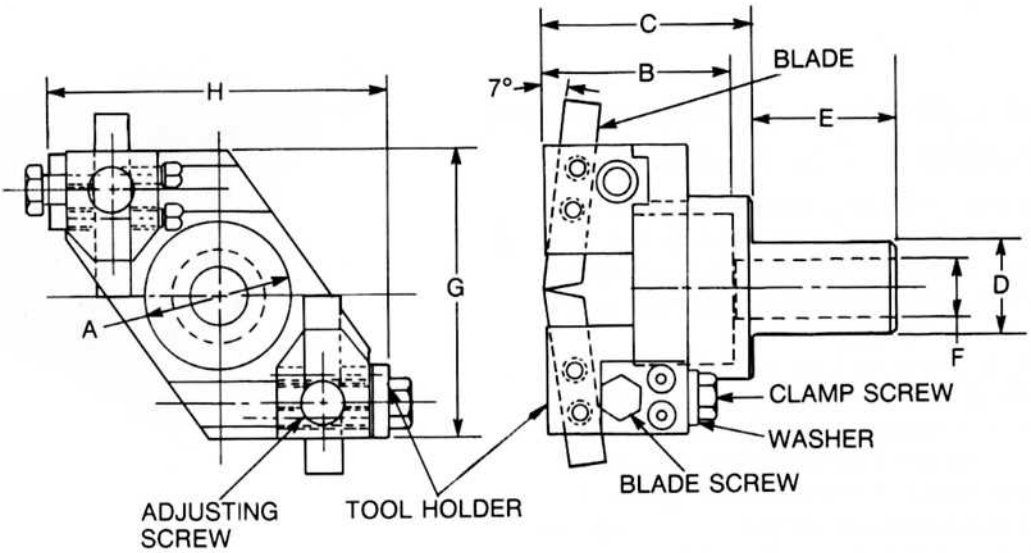

Balance Turning Tools

	Inches								
Tool No.	**A**	**B**	**C**	**D**	**E**	**F**	**G**	**H**	**Blade Size**
711-60-300	.81	1.34	1.56	.62	1.50	.38	2.60	2.26	1/4 X 5/16"
711-60-223	2.10	2.60	2.86	1.25	2.00	.81	4.00	4.70	1/2 X 1/2"
711-60-322	1.66	2.82	3.10	1.00	1.75	.69	4.00	4.00	1/2 X 1/2"
711-60-300	.81	1.34	1.56	.62	1.50	.38	2.60	2.26	1/4 X 5/16"
711-60-223	2.10	2.60	2.86	1.25	2.00	.81	4.00	4.70	1/2 X 1/2"
711-61-322	1.66	2.82	3.10	1.00	1.75	.69	4.00	4.00	1/2 X 1/2"

Turning length is unlimited when the workpiece will pass through the tool shank.

Note: Blade Blocks, Blade Block Retainers, Fine Adjustment Screw are interchangeable with equivalent sizes of Roller Back Box Tools.

Tool No.	**711-60-223** **711-61-223**	**711-60-300** **711-61-300**	**711-60-322** **711-61-322**
Blade Clamp Scr.	92-5012-1016	92-5391-808	92-5012-1016
Blade Hold. Clamp Scr.	92-5035-1220	92-5035-816	92-5035-1220
Blade Holder Washer	92-2040-1204-28	92-2040-802-18	92-2040-1204-28
Blade (Tool) Holder	211-6020	211-6018-1	211-6020
Adjusting Scr.	211-6022	211-6024-1	211-6022
Adjusting Scr. Retainer	211-6021	211-6023	211-6021
Retainer Screw	92-5385-612	472-642	92-5385-612
Body - R.H.	211-6015-1	211-6017-1	211-6019
Body - L.H.	211-6109-1	211-6108-1	211-6110
Blade	711-94092	711-94080	711-94092

NO. 62 SLIDE TOOLS FOR TURRETS

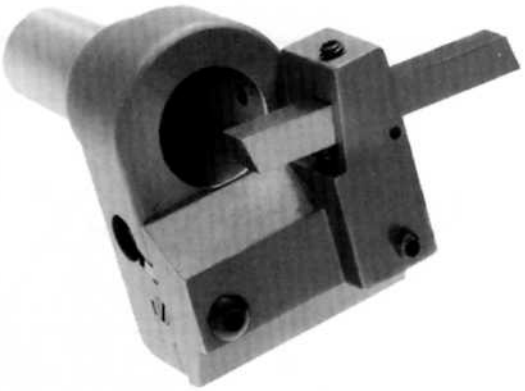

For Taper Turning - Turning Behind Shoulders - Tracer Turning!

These Slide Tools provide a rigid, accurate movable slide which permits longitudinal turning of tapers, turning behind shoulders, turning irregular shapes or contours, necking, foming or cutting-off.
They are actuated by a guide mounted on the front cross slide. Movement of the slide is equal to the amount of throw on the cross slide cam, which controls diameter. Length is controlled by the throw on the lead cam.
The tool bit remains on the same center line throughout slide travel. This means it is possible to turn tapers which will match a taper gage, or contours which can be controlled by the shape of the shoe on the guide.
Provision is made on these tools for holding No. 230 Back Rests. They are furnished with one hardened blade.

Shank Dia.	Max. Tool Slide Travel	Turning Capacity (Inches) Length	Turning Capacity (Inches) Diameter	Tool No.
5/8"	5/16"	† 1	up to 5/16 5/16 to 1/2	**711-62-100**
3/4"	13/32"	† 1-1/2	up to 3/8 3/8 to 5/8	**711-62-120**
1"	9/16"	† 2-1/4	up to 5/8 5/8 to 1	**711-62-122**

† Turned diameter will pass through shank bore.
For additional blades, see page 116.
Guides for this tool are on page 94.

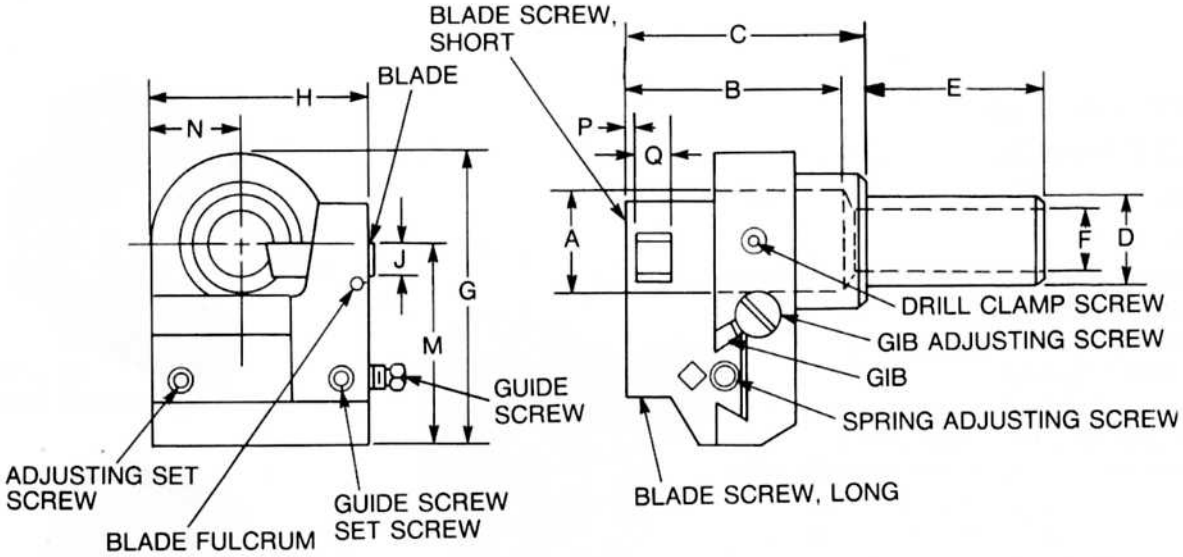

Tool No.	Inches A	B	C	D	E	F	G	H	J	M	N	P	Blades
711-62-100	9/16	17/32	1-17/32	5/8	1-5/16	7/16	2-1/32	1-19/32	1/4	1-11/32	11/16	3/32	1/4x1/4
711-62-120	3/4	1-11/16	1-15/16	3/4	2	7/16	2-7/16	1-15/16	5/16	1-3/4	13/16	1/8	5/16x5/16
711-62-122	1-1/8	2-9/16	2-11/16	1	2	11/16	3-1/4	2-7/16	3/8	2-1/4	1	1/8	3/8x3/8

Note: *Turning length is unlimited when the workpiece will pass through the tool shank.*
For Guides, see page 94.
For additional Blades, see page 116

Tool No.	711-62-100	711-62-122
Blade Fulcrum	211-6204	92-900-432
Blade Screw Long	92-5390-624	92-5391-836
Blade Screw Short	92-5391-610	92-5391-816
Gib	211-6203	211-6208
Gib Adjusting Scr.	92-5200-616	92-5200-824
Guide Screw Set Scr.	92-5390-608	92-5390-816
Guide Screw	92-5012-616	92-5010-824
Guide Screw Shoe	92-5930-504	92-5930-604
Spring Adj. Scr.	92-5071-808	92-5071-1012
Spring Adj. Scr.	92-5390-606	92-5385-812
Adj. Screw Shoe	92-5930-504	92-5930-604
Tool Holder Stop Pin	92-902-828	92-900-432
Tool Return Spring	92-1000-632-20	92-1000-848-20
Drill Clamp Screw	92-5390-616	92-5390-812
Plunger	211-21012	211-21013
Set Screw Spring	NONE	92-1000-608-23
Tool Holder	211-6202	211-6207
Body	211-6201-1	211-6205-1
Blade	711-94074	711-94083

Tool No.	711-62-120
Bar	211-6212
Bar Locating Pin	92-902-608
Bar Clamp Screw	92-5380-624
Bar Screw Lockwasher	92-2030-6
Blade Adjusting Scr.	92-5012-816
Blade Adjusting Rod	211-6213
Blade Clamp Screw	92-5191-814
Bar Adjusting Screw	92-5385-824
Bar Adjust Screw Shoe	92-5930-624
Bar Adjust Scr. Set Scr.	92-5390-812
Guide Screw Set Scr.	92-5390-812
Guide Screw	92-5012-824
Guide Screw Shoe	92-5930-604
Tool Holder Stop Pin	92-902-1228
Tool Return Spring	92-1000-1248-18
Drill Clamp Screw	92-5390-812
Plunger	211-21014
Tool Holder	211-6211
Body	211-6210
Blade	711-94080

SLIDE TOOL WITH INTERCHANGEABLE HEADS

Slide Tool Body with 3 Interchangeable Heads for Recessing, Turning, Knurling!

Features:

- **Faster, easier set-up with one-to-one movement ratio.**
- **Straight-line movement.**
- **Greater rigidity.**
- **Lower tool cost.**

Now, you can have a rigid, straight-line movement, one-to-one ratio movable slide tool which holds any of three heads for recessing, turning and knurling, and eliminates the problems associated with swing type tools.

A standard guide mounted on the front cross slide of the machine actuates the Slide Tools so that movement of the slide is equal to the amount of throw on the cross slide cam.

Slide Tool Body — Saves!

This Slide Tool Body is a rugged holder with a one-inch diameter shank which will accept any of three new heads for recessing, for turning, and for knurling. Slide travel of 9/16" provides ample machining capacities and straight-line, one-to-one movement ratio makes cam and tool design faster and easier than ever.

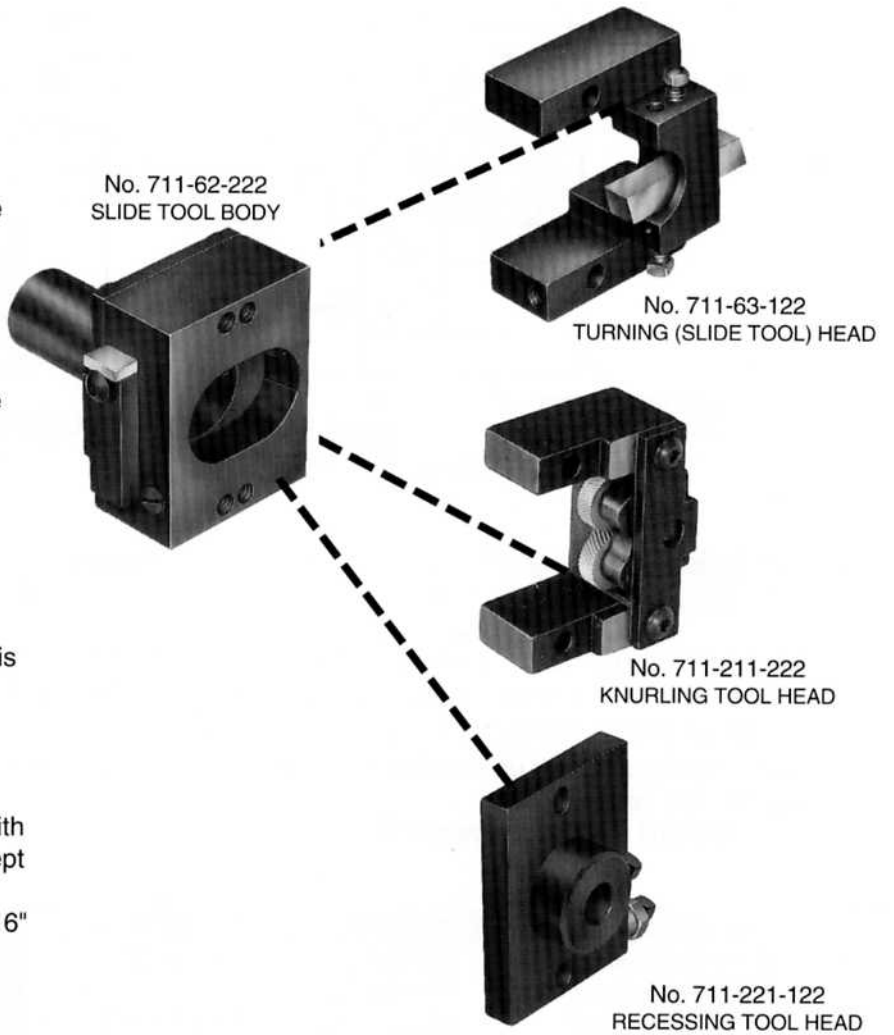

Name	Capacities	Tool No.
Slide Tool Body †	Minimum Slide Travel 9/16"	**711-62-222-1**
Slide Tool Head (Turning Head)	1-5/8" Dia. X 1-3/8" Long. 1" Dia. X 2-3/8" Long 5/8" Dia. X Mach. Cap.	**711-63-122**
Knurling Tool Head	1-5/8" Dia. X 1" Long 1" Dia. X 1-15/16" Long. 5/8" Dia. X Mach. Cap.	**711-211-222**
Recessing Tool Head	Maximum Tool Movement from Center 9/16"	**711-221-122**

† *Slide Tool Body has 1" shank diameter.*

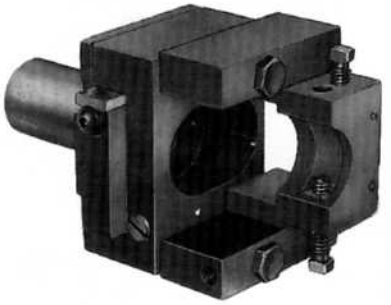

No. 711-63-122
TURNING TOOL

No. 711-211-222
KNURLING TOOL

No. 711-221-122
RECESSING TOOL

Save 50% and More on Tool Costs! Save Time in Cam and Tool Design!

Turning (Slide Tool) Head
Simplifies accurate longitudinal turning of tapers, turning behind shoulders, turning irregular shapes or contours, necking, forming or cutting-off. Tool bit remains on the same center line throughout slide travel. Blade can be reversed for left or right hand turning. Can be used with No. 230 Back Rest. Furnished with one hardened blade.

Knurling Tool Head
Now you can produce diamond knurls in the middle of a piece or behind a shoulder using a right hand and a left hand diagonal knurl. A pivoting fulcrum insures self-equalizing pressure on the knurls for uniform depth. Carbide pin provides long life. Can be used with No. 230 Back Rest.

Recessing Tool Head
Straight-line movement eliminates the problem of determining radial variance between diameters associated with swing tool recessing. Constant center-line machining permits grinding of correct geometry on tools for angular or diameter dimensions.

Design permits "On" or "Off" Center positioning for use of either Eccentric or Concentric tools and alternative mounting on Slide Tool Body provides 9/32" or 9/16" travel from center to permit wider use of standard sizes of Recessing Tools.

For tool dimensions, see page 46 and 47.
For Tool Guides, see page 94.
For additional Turning Blades, see page 116.
For additional Recessing Tool Blades, see page 96.
For Knurls, see page 118.

SLIDE TOOL WITH INTERCHANGEABLE HEADS

Dimensions - No. 62 Slide Tool Body

Tool No. 711-62-222-1

Inches							
B	D	E	F	G	H	M	N
1	1	2	11/16	2-11/16	2-13/32	1-11/32	1-1/64

Tool No.	711-62-222
Slide	211-6215-2
Slide Strap	211-6216
Gib	211-6217-1
Slide Spring	211-6218
Plunger	211-6219
Stop Pin	92-900-626
Slide Set Screw	472-1041
Bushing Clamp Screw	92-5071-824
Slide Adjust Screw	472-1084
Strap Mount Screw	92-5385-820
Shank	211-6214-2
Gib Adjusting Screw	211-6220

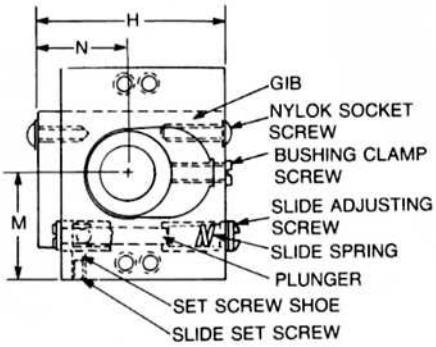

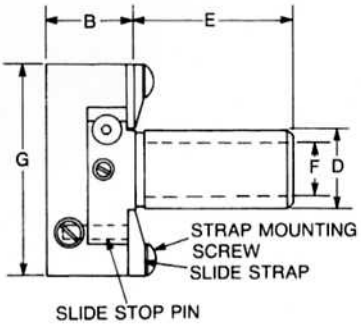

Dimensions - Slide Tool (Turning) Head

Tool No. 711-63-122

Inches									
B	C	G	H	J	M	N	O	P	Blades
-39/64	2-45/64	2-51/64	2-1/4	3/8	1-1/64	1-3/4	2-3/32	1-21/64	3/8 X 3/8

Tool No.	711-63-122
Blade	711-94083
Guide Screw	92-5010-824
Blade Clamp Screw	92-5010-824
Blade Clamp Screw	92-5010-832
Head Mount Screw	92-5035-836
Guide Screw Lock Nut	92-6015-810

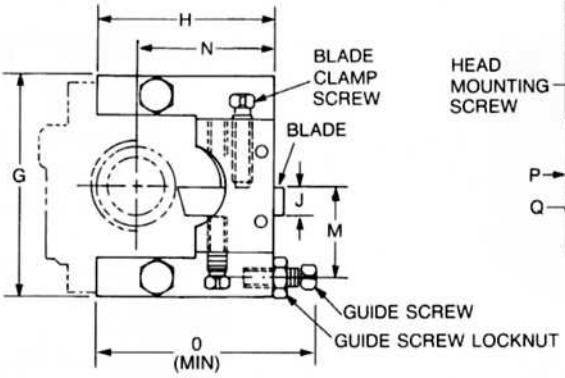

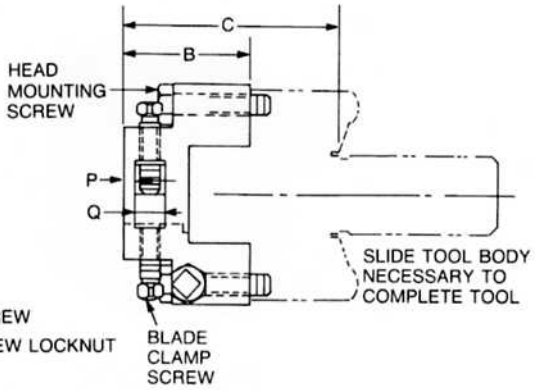

For ordering information, see pages 44 and 45

Dimensions No. 211 Knurling Tool Head No. 711-211-222

Inches									
B	C	G	H	J	M	N	O	P	Knurl Sizes
1-1/32	2-27/64	2-51/64	2-1/4	1/4	1-1/64	2	2-11/32	1/64	5/8 or 3/4 Dia.

Tool No.	711-211-222
Set Screw	472-238
Guide Screw	92-5010-824
Guide Scr. Lock Nut	92-6015-810
Carbide Knurl Pin	211-18513
Head	211-21101-1
Head Plate	211-21102
Knurl Holder	211-21103
Fulcrum	211-21104
Mounting Screw	92-5035-836
Plate Mounting Scr.	92-5385-816
Knurl Pin Set Scr.	92-5390-616

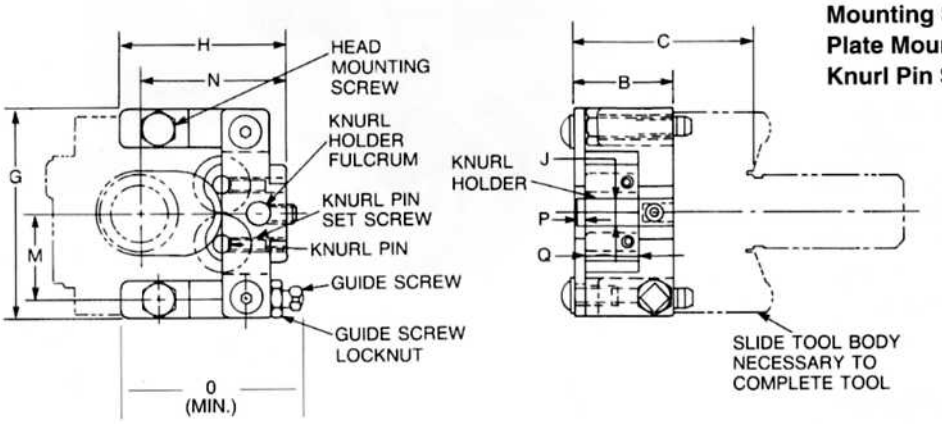

Dimensions No. 221 Recessing Tool Head No. 711-221-122

Inches						
A	B	C	G	H	M	O
1/2	15/16	2	2-51/64	2-1/64	1	1-5/8

Tool No.	711-221-122
Aux. Spring Holder	211-22102
Slide Spring	211-6218
Tool Clamp Screw	92-5010-816
Guide Screw	92-5010-824
Guide Scr. Lock Nut	92-6015-810
Head Mounting Scr.	92-5035-824
Head	211-22101

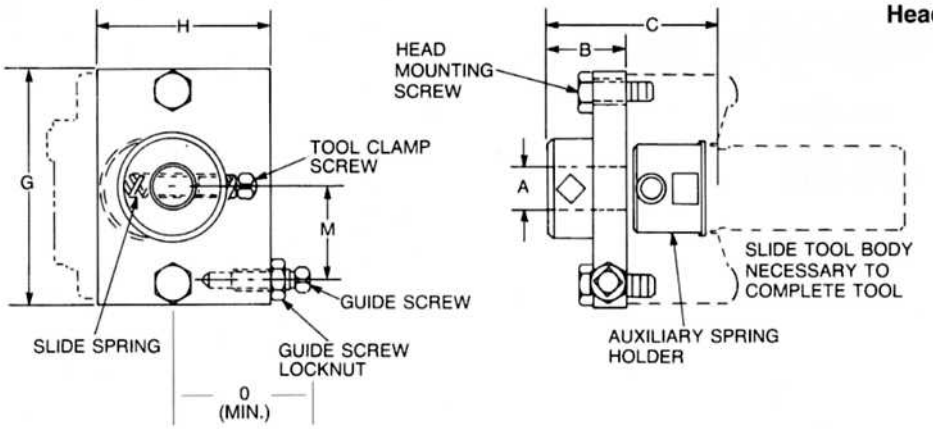

For ordering information, see pages 44 and 45.

NO. 64 DRILLING AND CHAMFERING TOOLS

Combine Operations - Save Set-up Time! For Facing While Counterboring - Deburring and Chamfering While Drilling or Reaming

Drilling and chamfering tools allow operations to be combined thereby saving set-up and production time.

The drill is held by a bushing in an adjustable head similar to the No. 65 Adjustable Tool Holder. An arm protruding from the side of the adjustable head holds the chamfering bit at a 45° angle to the drill. The bit can be altered for other angles. Round chamfering bits are used to facilitate grinding and to provide better clearance.

One chamfering tool blank is furnished with each tool.

Shank Dia.	Tool No.	H.S.S. Chamfer Tool Blank
5/8"	**711-64-100**	**211-6404**
3/4"	**711-64-120**	**211-6405**
1"	**711-64-122**	**211-6406**

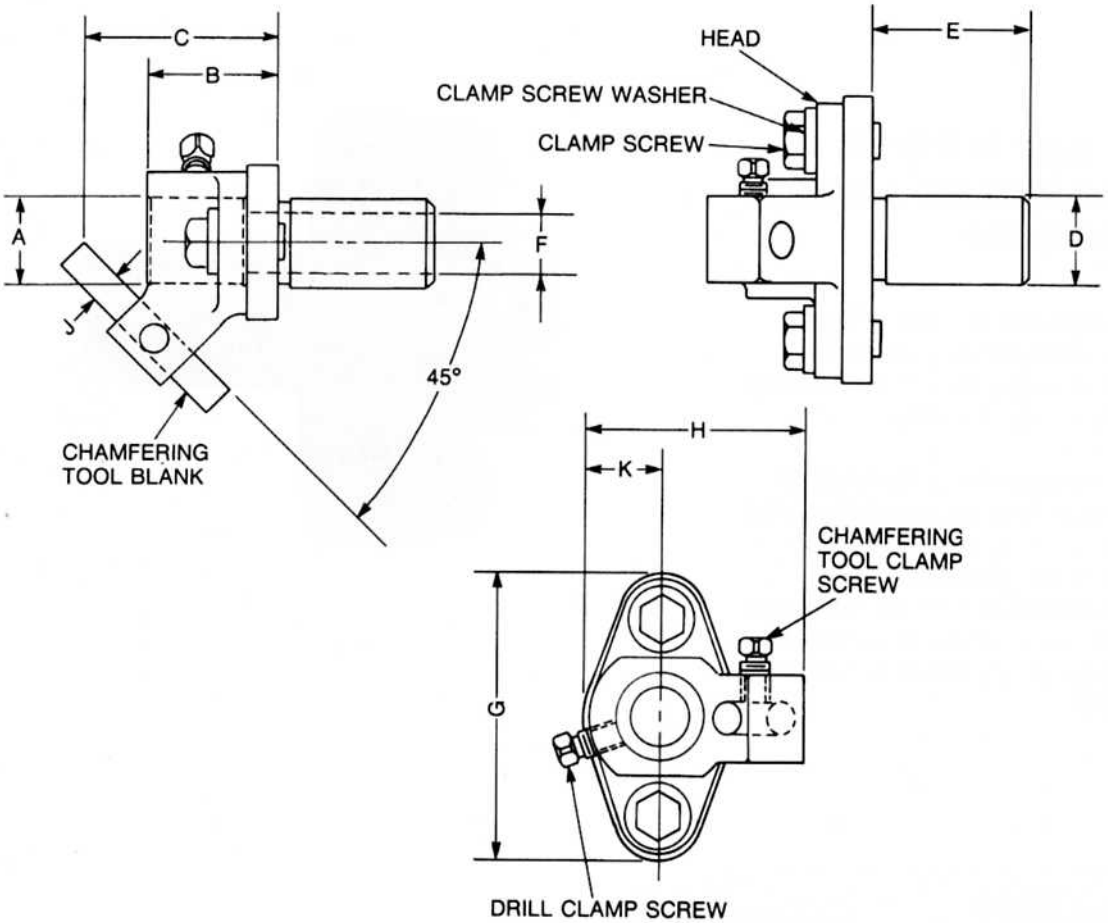

Tool No.	A	B	C	D	E	F	G	H	J	K
	Inches									
711-64-100	1/2	27/32	1-7/32	5/8	1-1/8	3/8	1-15/16	1-7/16	1/4	1/2
711-64-120	5/8	1-1/8	1-21/32	3/4	1-1/2	7/16	2-5/8	1-7/8	5/16	11/16
711-64-122	1	1-1/2	2-7/32	1	1-3/4	11/16	3-1/4	2-1/2	3/8	7/8

Tool No.	711-64-100	711-64-120	711-64-122
Head	211-6401-1	211-6602	211-6603
Clamp Screw	211-6535-1	92-5035-1020	92-5035-1228
Clamp Screw Washer	211-10545-1	92-2040-1002-20	92-2040-1204-24
Chamfering Tool Blank	211-6404	211-6405	211-6406
Cham. Tool Cl. Screw	92-5012-810	92-5012-816	92-5012-1016
Shank	211-6501	211-10905-1	211-6503-1

NO. 65 ADJUSTABLE TOOL HOLDERS

Accurate - Easy to Adjust! Correct Misalignment Between Spindle and Turret!

Adjustable Holders are used for holding drills, reamers, counterbores and similar tools, providing a simple means of centering these cutting tools with the work.

The cutting tool is mounted in the head of the tool either directly or by use of a bushing and is clamped securely in place by a set screw. An important advantage of this holder is that it maintains the axis of the tool parallel with the machine spindle, an essential condition for accurate alignment of the tool with the work.

Shank Dia.	Shank Length	Tool No.
5/8"	1-1/8"	**711-65-100**
5/8"	1-1/2"	**711-65-210**
3/4"	1-1/2"	**711-65-220**
3/4"	2"	**711-65-111**
1"	2-1/2"	**711-65-112**
1"	1-3/4"	**711-65-122**
1-1/4"	2"	**711-65-123**
1-1/2"	3-3/4"	**712-65-1150-1**
1-3/4"	3-3/4"	**712-65-1175**
2"	3-3/4"	**712-65-1200-1**

Order quality Tool Holders, Collets and Feeding Fingers from the B & S authorized stocking distributor in your area.

B&S

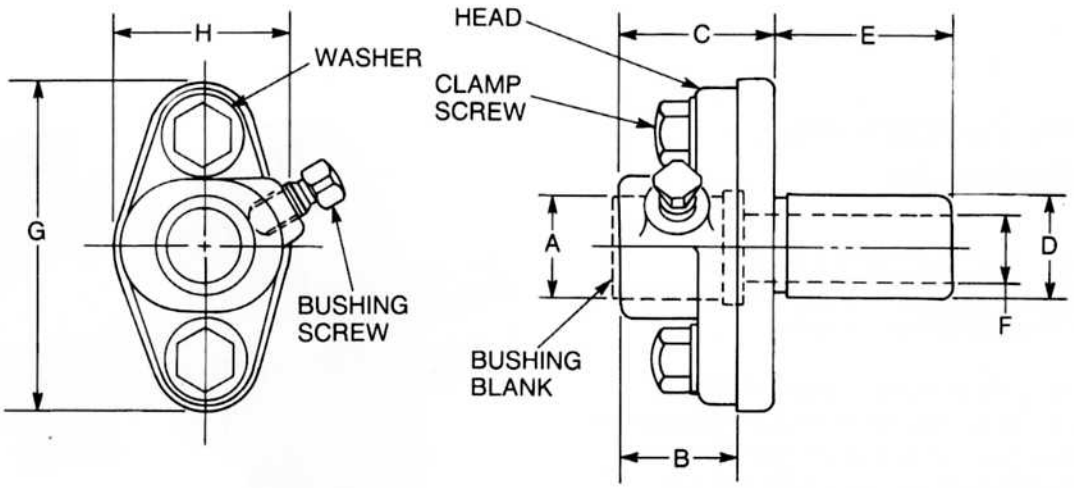

Tool No.	Inches							
	A	B	C	D	E	F	G	H
711-65-100	1/2	5/8	27/32	5/8	1-1/8	3/8	1-15/16	1
711-65-210	1/2	5/8	27/32	5/8	1-1/2	3/8	1-7/8	1
711-65-220	5/8	13/16	1-1/8	3/4	1-1/2	7/16	2-5/8	1-1/4
711-65-111	5/8	13/16	1-1/8	3/4	2	7/16	2-5/8	1-1/4
711-65-112	1	1-1/8	1-1/2	1	2-1/2	11/16	3-1/4	1-3/4
711-65-122	1	1-1/8	1-1/2	1	1-3/4	11/16	3-1/4	1-3/4
711-65-123	1.5	1.6	2	1.25	2	.81	4.3	2.2
712-65-1150-1	1-1/2	1-19/32	2-5/32	1-1/2	3-3/4	3/4	3-3/4	1-7/8
712-65-1175	1-1/2	1-19/32	2-5/32	1-3/4	3-3/4	3/4	4-3/4	2-5/8
712-65-1200-1	1-1/2	1-19/32	2-5/32	2	3-3/4	3/4	4-3/4	2-5/8

Tool No.	Bushing Screw	Clamp Screw	Clamp Washer	Head	Shank
711-65-100	92-5012-810	211-6535-1	211-10545-1	211-6510-2	211-6501
711-65-111	92-5012-1016	92-5035-1020	92-2040-1002-20	211-6532-2	211-6502-1
711-65-112	92-5012-1220	92-5035-1228	92-2040-1204-24	211-6513-3	211-6505-1
711-65-122	92-5012-1220	92-5035-1228	92-2040-1204-24	211-6513-3	211-6503-1
711-65-210	92-5012-810	211-6535-1	211-10545-1	211-6510-2	211-10900
711-65-220	92-5012-1016	92-5035-1020	92-2040-1002-20	211-6532-2	211-10905-1
711-65-123	92-5010-1624	92-5035-1632	92-2040-1604-28	211-6536	211-6537
712-65-1150-1	92-5010-1632	92-5035-1236	92-2040-1203-28	212-65-1500	212-10502
712-65-1175	92-5010-1624	92-5035-1636	92-2040-1604-32	212-6507	212-6504
712-65-1200-1	92-5010-1632	92-5035-1236	92-2040-1203-28	212-65-1500	212-10504

NO. 66 DRILLING AND TURNING TOOLS

Perform Two Operations Simultaneously!

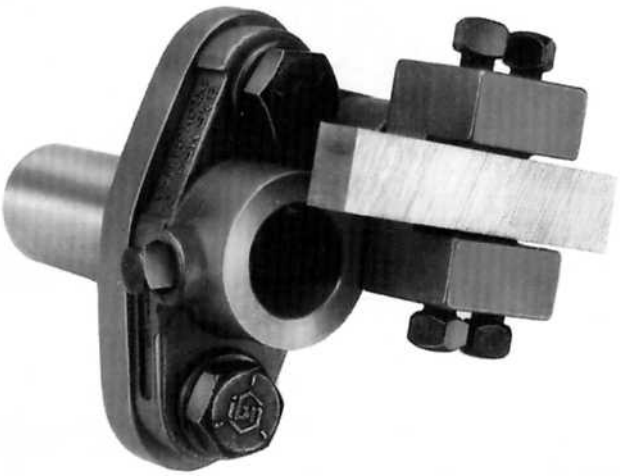

Fully adjustable, with the drill held by a bushing in an adjustable head, similar to the No. 65 Adjustable Tool Holders.

The turning blade is mounted in a blade holder, which is securely clamped in an arm protruding from the side of the adjustable head. The blade cuts tangentially and can be adjusted longitudinally along the length of the work. Tools can be adjusted to cut either left hand or right hand.

With these adjustments the operator can set his drill in the best position for stick-out with chip clearance and then set the turning blade in its correct relation with the drill.

These tools can be used for chamfering, facing, and light turning with drill, centerdrill or counterbore.

For Turning Blades, see page 116.

Shank Dia.	Maximum Turned Diameter	Tool No.
5/8"	3/8"	**711-66-100**
3/4"	11/16"	**711-66-120**
1"	1"	**711-66-122**
1-1/4"	2.4	**711-66-123**

Over 150 years of quality and craftsmanship have gone into the design and manufacture of all B & S Tool Holders, Collets and Feeding Fingers.

B&S

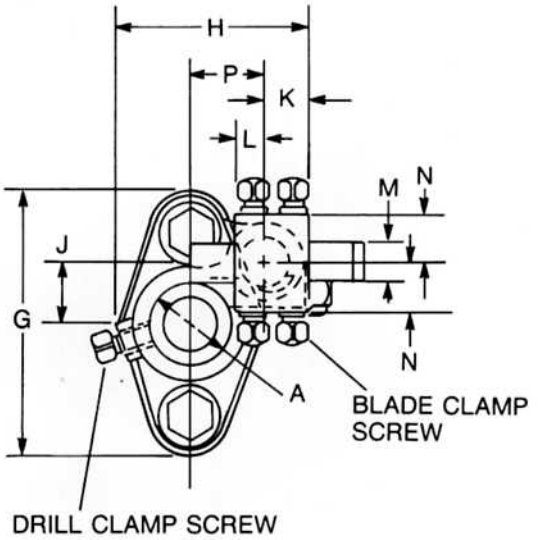

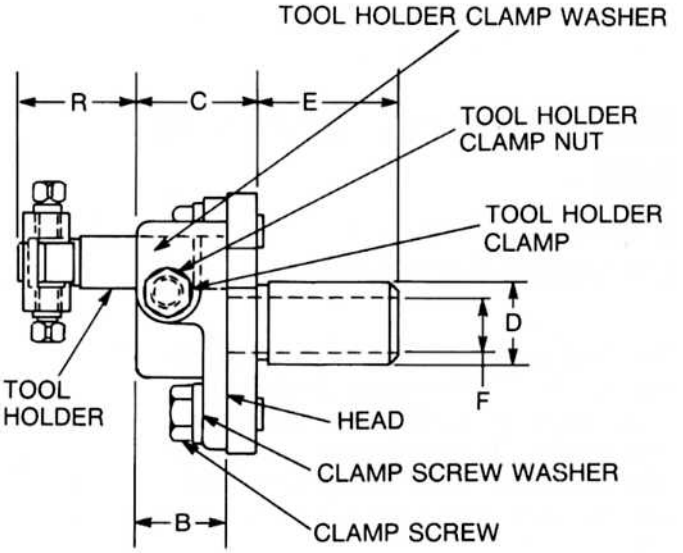

	Inches								
Tool No.	**A**	**B**	**C**	**D**	**E**	**F**	**G**	**H**	**J**
711-66-100	1/2	19/32	13/16	5/8	1-1/8	3/8	1-15/16	1-5/16	5/16
711-66-120	5/8	13/16	1-1/8	3/4	1-1/2	7/16	2-5/8	1-13/16	9/16
711-66-122	1	1-1/8	1-1/2	1	1-3/4	11/16	3-1/4	2-3/8	3/4
711-66-123	1.0	1.1	1.5	1.25	2.0	.81	4.3	3.15	1.4

	Inches					R		
Tool No.	**K**	**L**	**M**	**N**	**P**	**Max**	**Min**	**Blades**
711-66-100	5/16	1/4	1/4	5/16	1/2	13/16	7/16	1/4 X 1/4
711-66-120	7/16	11/32	7/16	1/2	3/4	1-3/32	19/32	5/16 X 7/16
711-66-122	9/16	3/8	1/2	5/8	15/16	1-7/16	5/8	3/8 X 1/2
711-66-123	.65	.65	.5	.6	1.4	1.55	.75	3/8 X 1/2

Tool No.	**711-66-100**	**711-66-120**	**711-66-122**	**711-66-123**
Head	211-6604-1	211-6605	211-6606	211-6616
Clamp Screw	211-6535-1	92-5035-1020	92-5035-1228	92-5035-1632
Clamp Screw Washer	211-10545-1	92-2040-1002-20	92-2040-1204-24	92-2040-2604-28
Tool Holder	211-6607-1	211-6608	211-6609	211-6614
Tool Holder Clamp	211-6610	211-6611	211-6612	211-6615
Tool Holder Cl. Washer	92-2040-602-12	92-2040-1002-20	92-2040-1202-20	92-2040-1202-20
Tool Holder Cl. Nut	92-6010-611	92-6015-1012	92-6015-1214	92-6015-1214
Blade Clamp Screw	92-5012-810	92-5010-824	92-5012-1020	92-5012-1020
Drill Clamp Screw	92-5012-812	92-5012-816	92-5012-1016	92-5012-1020
Shank	211-6601	211-6602	211-6603	211-6537
Blade	711-94074	711-94082	711-94085	711-94085

NO. 67 FLOATING ADJUSTABLE REAMER HOLDERS

SELF-ALIGNING - REAMS TO SIZE -

Eliminates Chatter -
Eliminates Bellmouth!

The Floating Reamer Holder has outstanding operational advantages. As its name suggests, the holder floats freely on bearings, providing alignment when the reamer enters the hole. The Floating Holder and the reamer are held centrally by a neoprene ring.

The reamer, after being adjusted to approximate alignment with work, aligns itself with the hole being reamed, eliminating bellmouthed and egg-shaped holes.

Shank Dia.	Tool No.
5/8"	**711-67-100**
5/8"	**711-67-200** *
3/4"	**711-67-120**
1"	**711-67-122**
1-1/4"	**712-67-1125** †
1-1/2"	**712-67-1150** †
2"	**712-67-1200** †

* *67-200 is miniature.*
† *Have flat on shank.*

B & S Tool Holders, Collets and Feeding Fingers incorporate the most effective design for their intended application.

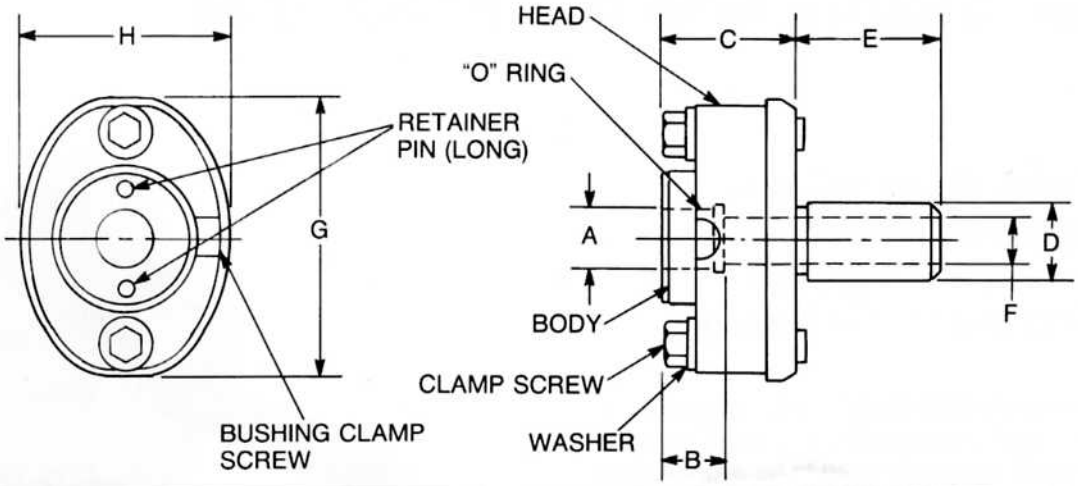

Tool No.	A	B	C	D	E	F	G	H
	Inches							
711-67-100	1/2	1/2	1-1/16	5/8	1-1/8	3/8	2-1/4	1-11/16
711-67-200	1/4	3/8	1-1/16	5/8	1-1/8	3/8	1-3/8	1
711-67-120	5/8	13/16	1-7/16	3/4	1-1/2	1/2	3	2
711-67-122	1	1-3/16	1-13/16	1	2	11/16	3-5/8	2-3/8
712-67-1125 †	1-1/2	3/4	2-5/16	1-1/4	3-3/4	3/4	4-1/8	2-3/4
712-67-1150 †	1-1/2	3/4	2-5/16	1-1/2	3-3/4	3/4	4-1/8	2-3/4
712-67-1200 †	1-1/2	3/4	2-5/16	2	3-3/4	3/4	4-1/8	2-3/4

† *Have flat on shank.*

Tool No.	711-67-100	711-67-120	711-67-122	711-67-200
Head	211-6702-1	211-6714	211-6712-2	211-6719
Body	211-6703-1	211-6715	211-6710	211-6718
Retainer	211-6704	211-6716	211-6709	NONE
Spacer	211-6707	211-6717	211-6711	211-6720
Ret. Pin-Long	211-6706	92-900-520	92-900-620	NONE
Ret. Pin-Short	211-6706	92-900-514	92-900-616	NONE
Steel Ball	429-1288	429-1288	429-1288	NONE
"O-Ring"	466-615	466-608	466-616	466-607
Bush. Clamp Screw	92-5391-808	92-5390-1008	92-5391-1210	92-5390-606
Clamp Washer	211-10545-1	92-2040-1002-20	92-2040-1004-20	211-6723
Clamp Screw	211-10520-1	92-5035-1032	92-5035-1034	211-6724
Shank	211-6701	211-6713	211-10508-5	211-7621
Stop Pin	NONE	NONE	NONE	92-902-410

Tool No.	712-67-1125	712-67-1150	712-67-1200
Head	212-6701	212-6701	212-6701
Body	212-6702	212-6702	212-6702
Retainer	212-6703	212-6703	212-6703
Spacer	212-6704	212-6704	212-6704
Guide Pin	92-902-1216	92-902-1216	92-902-1216
Ball	429-1293	429-1293	429-1293
"O-Ring"	466-273	466-273	466-273
Bush. Clamp Screw	472-689	472-689	472-689
Washer	92-2040-1202-24	92-2040-1202-24	92-2040-1202-24
Clamp Screw	92-5035-1236	92-5035-1236	92-5035-1236
Shank	212-10501	212-10502	212-10504

ADJUSTABLE STUB COLLET HOLDERS

Faster, Easier Set-up - Improved Accuracy - Increased Versatility - Time and Money Savings!

Adjustable Stub Collet Holders simplify set-up and alignment of the tool with the center of work. They only need to be aligned once after positioning in the turret. Mating tapers permit tool and collet changes without need for realigning holder.

Stub Collets used with these holders have a range of +.005 to -.010" and eliminate need for special bushings for decimal, metric, letter, number and fractional sizes of tool shanks.

Stub Collets close concentrically and hold tool shank over entire length of collet. They are hardened and ground with taper alignment between holder and collet.

Stub Collet Holders use standard, off-the-shelf, ready-to-use Stub Collets and eliminate the need to drill, ream and finish bushing blanks.

Hardened and ground Stub Collets last longer and hold tools truer than soft bushings. They are the same standard collets used with B & S Screw Machines for surer, more concentric gripping of stock.

Shank Dia.	Collets Used	Collet Size, Range	Tool No.
5/8"	#10 Stub	(29 sizes) 1/16" to 1/4"	**711-68-100**
3/4 "	#11 Stub	(40 sizes) 5/64" to 13/16"	**711-68-120**
1"	#22 Stub	(65 sizes) 1/8" to 1-1/4"	**711-68-122**

For Stub Collets, see page 10, 11 and 14 to 19.

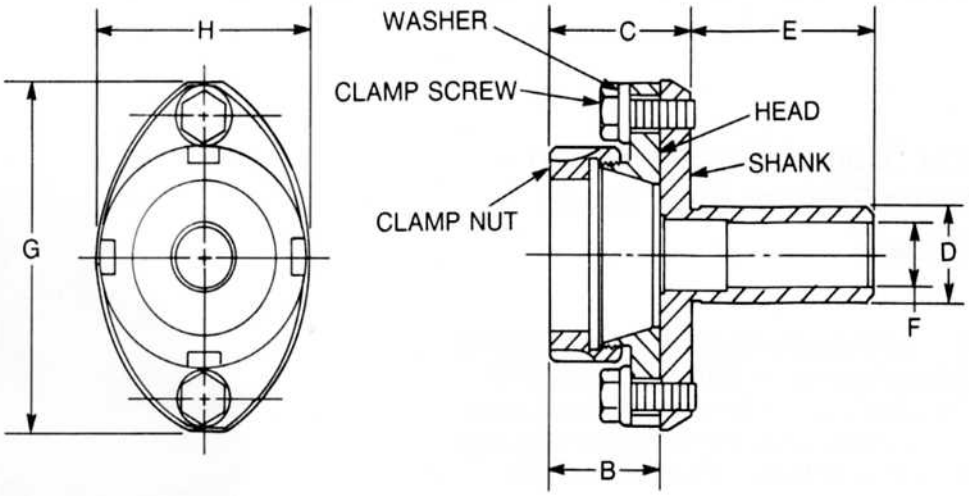

Tool No.	B (max.)	C (max.)	D	E	F	G	H
	Inches						
711-68-100	7/8	1-1/32	5/8	1-1/8	3/8	2-5/16	1-5/8
711-68-120	1-1/8	1-15/16	3/4	1-13/16	7/16	2-13/16	2-1/16
711-68-122	1-13/64	1-35/64	1	2-1/16	11/16	3-23/32	2-13/32

Tool No.	711-68-100	711-68-120	711-68-122
Head	211-6801	211-6807	211-6804-1
Clamp Nut	288-10-6-2	211-6808	211-6809
Clamp Screw	92-5035-816	211-6805	92-5035-1028
Washer	92-2040-602-12	92-2040-1002-20	92-2040-1004-20
Wrench	92-2510-40		
Shank	211-6810	211-10538-2	211-10508-5

Stub Collet Holder with Complete Set of Collets

Set permits holding all sizes of tool shanks between 1/16" and 1/2". 29 No. 10 Stub Collets handle all fractional, decimal, metric, letter or number sizes. Furnished complete with wrench.

Sets are available for #11 and #22 stub collets upon request. Contact your local distributor.

Description	Tool No.
Complete Set — (Round collets only)	
#10 Stub	711-68-1
#11 Stub	711-68-11
#22 Stub	711-68-22

The wrench for 711-68-1 is 92-2510-38

NOS. 83 AND 84 THREAD ROLL HOLDERS

For "Bump" Thread Rolling From Front or Back Cross Slides!

B & S Thread Roll Holders are made in five different sizes to accommodate standard thread rolls in a wide range of thread sizes. The holders are available in two styles, one for narrow and one for wide thread rolls.

The design of the holders includes a swivel arrangement which can be adjusted to compensate for any deflection in work caused by pressure of the rolls.

The end of the body holding the roll has one thin support so that the thread roll can be used close to the collet. Rolls are mounted on long-wearing carbide pins.

Holders can be used on either the front or back cross slide by turning the tool over and merely reversing the position of clamping bolt and swivel. A spacer is supplied with the wide holders which accommodate rolls of two different widths.

Machines where used	Maximum Roll Dia.	Standard Rolls Widths	Tool No.
No. 83 Holders — For Narrow Rolls			
00 Auto.	1-3/4"	1/4" and 5/16"	**711-83-200**
0 Auto.	2-1/4"	3/8" and 1/2"	**711-83-120**
2 Auto. & 3	2-1/2"	1/2" and 5/8"	**711-83-122**
No. 84 Holders — For Wide Rolls			
00 Auto.	1-3/4"	3/8" and 1/2"	**711-84-100**
2 Auto. & 3	2-1/2"	3/4"	**711-84-122**

Over 150 years of quality and craftsmanship have gone into the design and manufacture of all B & S Tool Holders, Collets and Feeding Fingers.

B&S

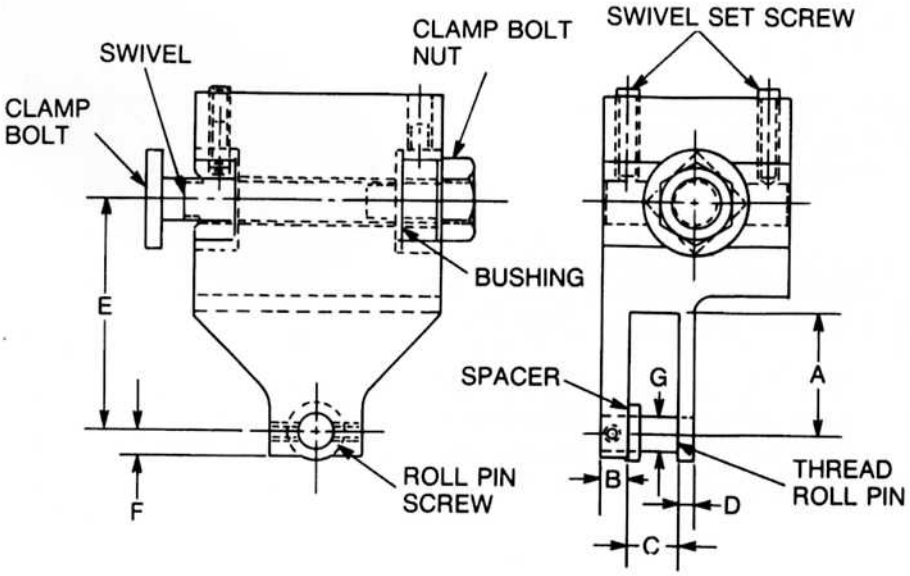

Tool No.	Inches						
	A	B	C	D	E	F	G
711-83-200	31/32	5/16	5/16	3/16	1-51/64	7/32	1/4
711-83-120	1-5/16	5/16	1/2	3/16	2-7/16	9/32	3/8
711-83-122	1-7/16	7/16	5/8	3/16	3-3/64	11/32	1/2
711-84-100	31/32	5/16	1/2	3/16	1-51/64	9/32	3/8
711-84-122	1-7/16	7/16	3/4	3/16	3-3/64	7/16	5/8

Tool No.	711-83-200	711-83-120	711-83-122	711-84-100	711-84-122
Bushing	211-8303	211-8312	211-8307	211-8303	211-8307
Thread Roll \Pin	211-18514	211-8402	211-8316	211-8402	211-8405
Roll Pin Screw	92-5390-612	92-5390-612	92-5390-812	92-5390-612	92-5390-812
Swivel	211-8302-1	211-8311-1	211-8306-1	211-8302-1	211-8306-1
Swivel Set Screw	92-5070-824	92-5070-832	92-5391-1232	92-5070-824	92-5390-1232
Spacer	211-8314	211-8401	211-8315	211-8401	NONE
Clamp Bolt	211-13587	211-13016	211-13012	211-13587	211-13012
Clamp Bolt Nut	92-6015-1214	211-13015	92-6015-1628	92-6015-1214	92-6015-1628
Body	211-8313	211-8310	211-8317	211-8403-1	211-8406

NO. 90 RELEASING "ACORN" DIE HOLDER

Releases Without Shock!

B & S Releasing "Acorn" Die Holders have a built-in clutch mechanism that allows the holder to be released without shock.

Shank Dia.	Length	Threading Capacity Diameter	Tool No.
5/8"	7/8"	from 1/16" to 1/4"	**711-90-100**
5/8"	1-3/8"	from 1/4" to 5/16"	**711-90-110**
3/4"	1-1/2"	from 1/4" to 7/16"	**711-90-111**
1"	2-1/8"	from 3/8" to 11/16"	**711-90-112**

NO. 95 CLOSER FOR SELF-OPENING DIE HOLDERS

For Use With All Makes of Die Heads Used on B & S Closed Bed Automatic Screw Machines

The Closer attaches readily to the top front of the machine. It has longitudinal adjustment to permit the correct positioning for operating the button of the self-opening die head as the turret indexes and button on the die head contacts the die closer. For use on Nos. 00, 0, 2 Automatic Screw Machine and No. 00 Ultramatic Machines.

Description	Tool No
No. 95 Closer	**711-95-200**

Note: Contact your local B & S Replacement Parts Distributor for the Die Holder Closer for No. 2 Ultramatics

NO. 90 RELEASING "ACORN" DIE HOLDER

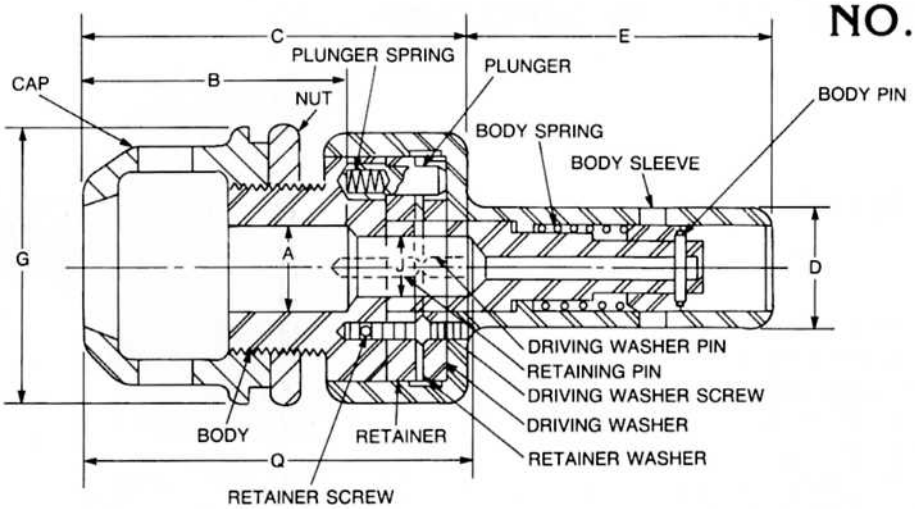

Tool No.	Die No. Used	Inches A	B	C	D	E	G	J	Q
711-90-100	1	3/8	15/16	1-3/4	5/8	1-3/32	1-13/32	---	---
711-90-110	2	3/8	1-9/16	2-1/4	5/8	1-7/16	1-13/32	---	---
711-90-111	2	1/2	1-1/2	3-1/4	3/4	2	1-11/16	---	---
711-90-112	3	3/4	2-1/8	3-1/8	1	2-1/2	2	9/16	3-1/4

Tool No.	711-90-100	711-90-110	711-90-111	711-90-112
Body Pin	211-7544	211-7544	92-900-414	211-8032
Body Spring	211-8036	211-8036	92-1000-1840-19	92-1000-2238-18
Body Sleeve	211-8017	211-8017	211-7517	211-8018
Driving Washer	211-8028	211-8028	211-8023	472-79
Driv. Washer Screw	92-5081-408	92-5081-408	92-5081-408	211-8038
Driv. Washer Pin	92-900-408	92-900-408	92-900-408	92-900-612
Plunger	211-8033	211-8033	211-8034	211-8035
Plunger Spring	92-1000-610-26	92-1000-610-26	92-1000-610-26	92-1000-612-26
Retainer	211-8026	211-8026	211-8021	211-8024
Retainer Screw	211-8039	211-8039	92-5081-416	472-1329
Retainer Washer	211-8027	211-8027	211-8022	211-8025
Retainer Pin	92-900-416	92-900-418	NONE	92-900-620
Roller	211-8031	211-8031	211-8031	211-8030
Cap	479-107	479-3109	479-3109	479-3111
Nut	479-3108	479-3110	479-3110	479-3112
Body	211-9001	211-9002	211-9003	211-9004
Shank	211-9006	211-9007	211-9008	211-9010

NO. 95 CLOSER FOR SELF-OPENING DIE HOLDERS

Tool No.	711-95-200
Bracket	211-9502-1
Die Closer	211-9507
Clamp Screw	92-5200-1236
Clamp Washer	92-2040-1202-28
Nut	92-6015-1620
Washer	92-2010-1602-28

ADJUSTABLE FLOATING TAP HOLDERS

For Perfect Alignment of Tap with Work

The adjustable feature of these tap holders provides a definite advantage in accurately aligning the tap with the work. The tap holder is adjustable on the tool body. This permits the tap to be centered accurately with the hole and then clamped securely in position. The tap always remains parallel with the axis of the work. Available in both non-releasing and releasing types.

No. 100 Adjustable Tap Holders
Non-releasing with Anti-friction Pull-out
These holders are a pull-out type for use on automatic machines where the spindle is reversed automatically. Taps are held in the holder either directly, or by a bushing. An extra "finish weight" spring is furnished so a finish tap can pick up a rough tapped thread. Holders are supplied with a through hole to end the need for cutting off taps.

No. 105 Adjustable Tap Holders
Releasing Type
Releasing tap holders have a clutch mechanism which releases the tap when it reaches the required depth. They work well in hand operated machines and on automatic machines when you need a releasing holder to simplify the cam design.

Holders are furnished for right-hand tapping. They can be converted to left-hand tapping simply by changing the roll to the other pocket provided in the head. Holders are provided with a through hole as well as a reversible hardened driving key and variable pull-out.

Non-releasing

103 Miniature Tap Holder

Shank Dia.	Tool No.
Non-releasing Holders	
5/8"	**711-100-400**
5/8"	**711-103-100 ***
3/4"	**711-100-320**
1"	**711-100-322**
Releasing Holders	
5/8"	**711-105-200**
3/4"	**711-105-311**
1"	**711-105-312**
1-1/4"	**712-105-1125 †**
1-1/2"	**712-105-1150 †**
1-3/4"	**712-105-1175 †**

* Miniature Tap Holder
† Have flat on shank.

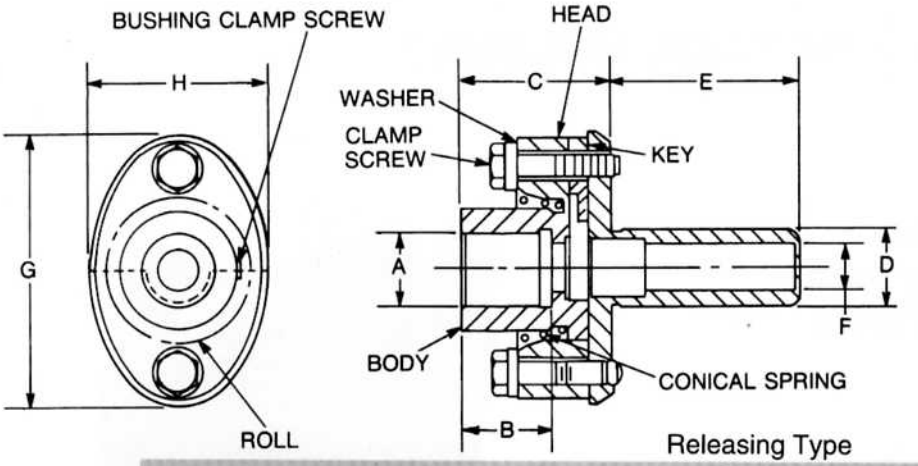

Releasing Type

Tool No.	Inches A	B	C	D	E	F	G	H
Adjustable Tap Holders — Non-Releasing								
711-100-400	1/2	11/16	1-1/16	5/8	1-1/8	5/16	2-1/4	1-1/2
711-100-320	5/8	13/16	1-7/16	3/4	2	7/16	3	2
711-100-322	1	1-3/16	2	1	2-1/16	5/8	3-5/8	2-3/8
711-103-100 *	1/4	3/8	13/16	5/8	1-1/8	---	15/16	15/16
Adjustable Tap Holders —Releasing								
711-105-200	1/2	11/16	1-1/16	5/8	1-1/8	5/16	2-1/4	1-1/2
711-105-311	5/8	13/16	1-7/16	3/4	2	7/16	3	2
711-105-312	1	1-3/16	2	1	2-1/16	5/8	3-5/8	2-3/8
712-105-1125 †	1-1/2	1-11/16	2-3/4	1-1/4	3-3/4	3/4	4-1/8	2-3/4
712-105-1150 †	1-1/2	1-11/16	2-3/4	1-1/2	3-3/4	3/4	4-1/8	2-3/4
712-105-1175 †	1-1/2	1-11/16	2-3/4	1-3/4	3-3/4	3/4	4-1/8	2-3/4

Tool No.	711-100-400	711-100-320	711-100-322	711-103-100 *
Body	211-10002-4	211-10006-4	211-10008-5	211-10302
Head	211-10020-1	211-10027-2	211-10024-5	NONE
Shank	211-10505-2	211-10538-2	211-10508-5	211-10301
Clamp Screw	211-10550	211-10559-1	92-5035-1040	92-5390-606
Cl. Screw Washer	92-2040-602-12	92-2040-1002-20	92-2040-1002-20	NONE
Spring	211-10551	211-10554-1	211-10558-2	92-1000-1228-22
Ball	429-1288	NONE	NONE	NONE
Bushing Cl. Screw	92-5390-806	92-5390-808	92-5390-1012	NONE
Finish Tap Spring	92-1000-1424-19	92-1000-1640-18	211-10031-1	NONE
Key	NONE	NONE	NONE	211-10303
Spring Ret. Screw	NONE	NONE	NONE	472-606

Tool No.	711-105-200	711-105-311	711-105-312	712-105-1125 †	712-105-1150 †	712-105-1175 †
Body	211-10501-5	211-10502-3	211-10503-4	212-10505	212-10505	212-10505
Head	211-10526-2	211-10534-2	211-10527-3	212-10506	212-10506	212-10506
Key	211-10548	211-10552	211-10556-1	212-10508	212-10508	212-10508
Roll	211-10549-1	211-10560	211-10557-1	211-10557-1	211-10557-1	211-10557-1
Clamp Screw	211-10550	211-10559-1	92-5035-1040	92-5035-1244	92-5035-1244	92-5035-1244
Spring	211-10551	211-10554-1	211-10558-2	212-10510	212-10510	212-10510
Cl. Scr. Washer	92-2040-602-12	92-2040-1002-20	92-2040-1002-20	92-2040-1202-24	92-2040-1202-24	92-2040-1202-24
Bushing Cl. Scr.	92-5390-806	92-5390-808	92-5390-1012	472-689	472-689	472-689
Finish Tap Spr.	92-1000-1424-19	92-1000-1640-18	211-10031-1	92-1000-3234-12	92-1000-3234-12	92-1000-3234-12
Shank	211-10505-2	211-10538-2	211-10508-5	212-10501	212-10502	212-10503

* Miniature Tap Holder - Reference drawing above

† Have flat on shank

ADJUSTABLE V-JAW TOOL HOLDERS

With Reversible Clamp for Extended Tool Holding Range! Eliminate Bushings - Center Tools Accurately!

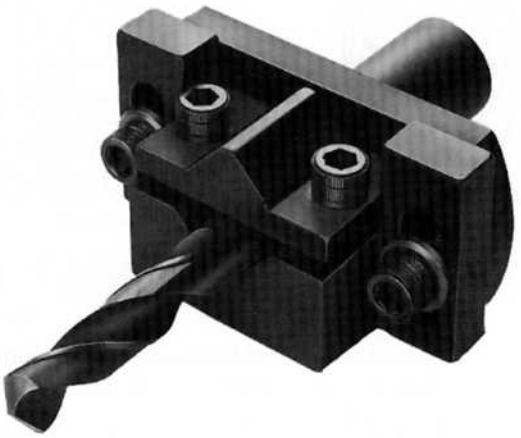

Any size tool within the range of these holders will be held securely — whether the size is a fraction or a decimal, letter or number, English or Metric. One V-Jaw tool holder will hold them all.

Bushings are not needed with the Adjustable V-Jaw Tool Holder. Save the costs of inventorying them or making them — save the time and annoyance of finding the right one.

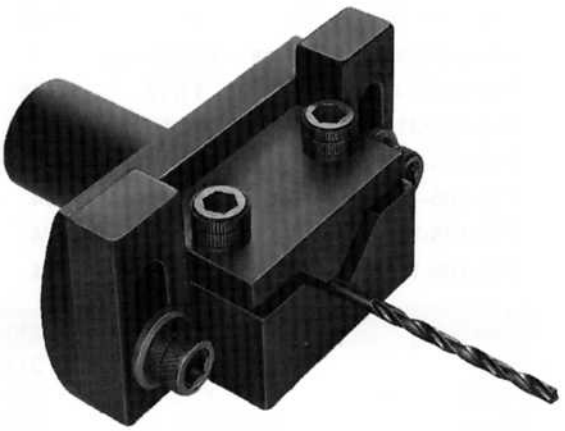

The V-Jaw Tool Holder centers tools accurately and gives you the precision capabilities of a Toolmaker's V-Block. The "V" is square to the face within .0003"; the face is square to the shank within .0002". The reversible clamping piece completes the steadfast 3-line grip — with no marring of the tool. Shank and flange are one piece, for extra rigidity. Simple centering (especially since one wrench fits all screws).

	Capacity		
Shank Dia.	**Maximum**	**Minimum**	**Tool No.**
5/8"	1/2"	1/64"	**711-109-200**
3/4"	3/4"	1/16"	**711-109-220**
1"	1"	1/8"	**711-109-222**

Order quality Tool Holders, Collets and Feeding Fingers from the B & S authorized stocking distributor in your area.

B&S

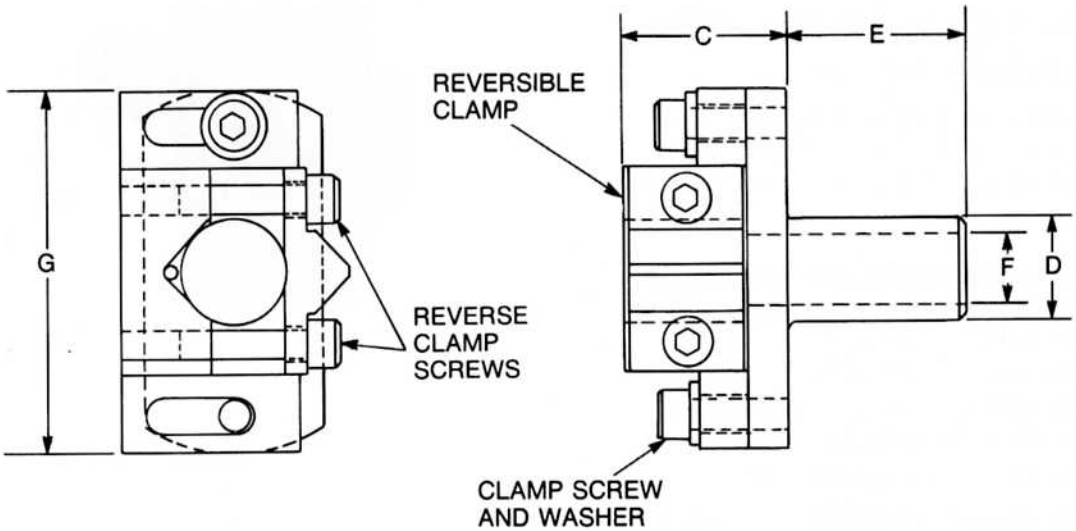

Tool No.	Inches				
	C	D	E	F	G
711-109-200	.94	.62	1.14	.40	2.00
711-109-220	1.25	.75	1.50	.44	2.60
711-109-222	1.62	1.00	1.75	.69	3.50

Tool No.	711-109-200	711-109-220	711-109-222
Shank	211-10904	211-10917	211-10920
Head	211-10915	211-10918	211-10921
Clamp	211-10916-1	211-10919	211-10922
V-Clamp Screw	92-5380-632	92-5380-836	92-5381-1036
Clamp Screw	472-3555	92-5380-824	92-5381-1032
Clamp Scr. Washer	92-2040-602-12	92-2040-802-16	92-2040-1003-20

NO. 111 BORING TOOL HOLDERS

Adjustable head with Graduated Screw Speeds Set-up

Graduated adjusting screw permits the rapid and accurate setting of the boring tool, each graduation representing .001" of the radial movement.

Nos. 711-111-200 and 711-111-220 have an eccentric hole and use concentric boring tools shown below. No. 711-111-322 is furnished with a half-inch eccentric bushing for holding the concentric boring tools listed. It is made with a concentric hole, 3/4" dia. to accommodate 3/4" shank boring tools.

Shank Dia.	Slide Adjustment	Eccentricity	Tool No.
5/8"	3/32"	.020"	**711-111-200**
3/4"	5/32"	.026"	**711-111-220**
1"	5/32"	.035"	**711-111-322 †**

†711-111-322 has a concentric hole and is furnished with .035" eccentric bushing. Holder accommodates 3/4" shank boring tools directly. It also has a concentric bushing with 1/2" ID.

CONCENTRIC BORING TOOLS

High Speed Steel - Hardened and Ground

Tool Holder where used	Tool No. Pkg. of 4
711-111-200	**711-94600** **711-94601** **711-94602** **711-94603**
711-111-220	**711-94604**
711-111-322	**711-94605** **711-94606**

For help selecting the correct boring tool for your application, refer to the dimension chart on page 67.

NO. 111 BORING TOOL HOLDERS

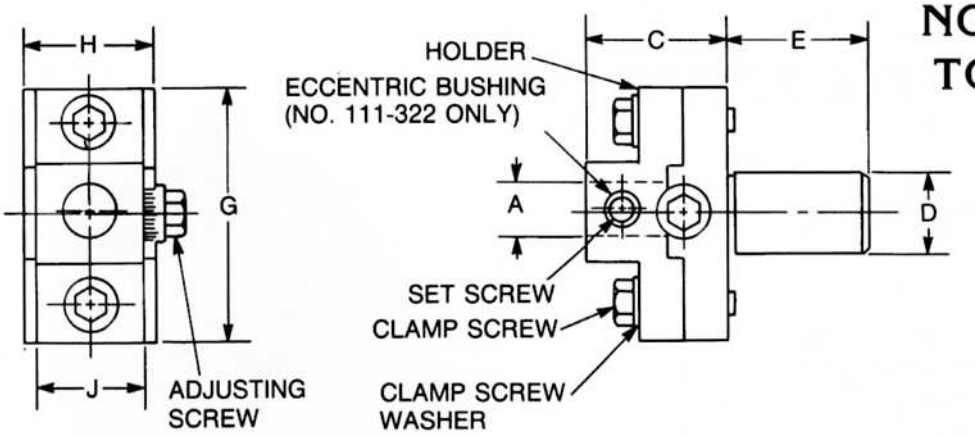

Dimensions — No. 111Boring Tool Holder

	Inches						
Tool No.	**A**	**C**	**D**	**E**	**G**	**H**	**J**
711-111-200	5/16	1	5/6	1-1/8	1-7/8	1	3/4
711-111-220	1/2	1-5/16	3/4	1-1/2	2-5/8	1-3/8	1-1/8
711-111-322	.75† - .5 *	1.82	1.0	2.0	3.25	1.75	1.5

*** With eccentric bushing**

† Without bushing

Tool No.	**711-111-200**	**711-111-220**	**711-111-322**
Holder	211-11102-2	211-11108-2	211-11106-3
Adjusting Screw	211-11103	211-111110-1	211-11111
Clamp Screw	211-10520-1	92-5035-832	92-5035-1234
Set Screw	92-5390-808	92-5390-1012	92-5381-1036
Clamp Scr. Washer	211-10545-1	92-2040-8012-18	92-2040-1202-24
Shank	211-11101-2	211-11109-2	211-11105-3
Concentric Bushing	NONE	NONE	211-11112
Ecc. Bushing	NONE	NONE	211-11113
Tool Clamp Screw	NONE	NONE	92-5390-1016
Bushing Clamp Scr.	NONE	NONE	92-5390-1216

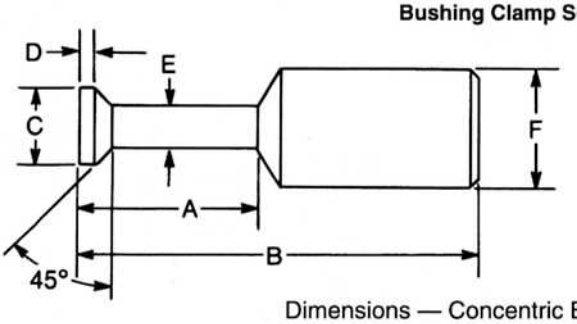

CONCENTRIC BORING TOOLS

Dimensions — Concentric Boring Tools

	Inches					
Tool No.	**A**	**B**	**C**	**D**	**E**	**F**
711-94600	5/16	13/16	.125	.046	.101	5/16
711-94601	3/8	7/8	.156	.046	.126	5/16
711-94602	7/16	15/16	.187	.046	.151	5/16
711-94603	5/8	1-1/8	.250	.046	.200	5/16
711-94604	5/8	1-3/8	.230	.062	.190	1/2
711-94605	3/4	1-1/2	.312	.062	.250	1/2
711-94606	15/16	1-11/16	.375	.062	.300	1/2

TOOL POSTS FOR CIRCULAR TOOLS

Hold Circular Forming Tools on Cross Slides

All circular tool posts have fine adjustment for setting tools accurately on center. Each tool post is equipped with a raising block so it may be used with the spindle running in either direction. A swivel is also provided for squaring-up the tool post.

Machines Where used	Max. Dia. of Tool	Min. Dia. of Tool	Tool No.
Tool Posts for Circular Tools (Front)			
2 & 2G Auto, & 3	3"	2"	**711-130-222 †**
2 Auto. - 3/4 Spin	2-1/4"	1-1/4"	**711-133-222 ***
00 & 00G Auto.	1-3/4"	1"	**711-135-100**
0 & 0G Auto.	2-1/4"	1-1/4"	**711-135-120**
2 & 2G auto. & 3	3"	1-1/2"	**711-135-122**
Tool Post for Circular Tools (Back)			
2 & 2G Auto. & 3	3"	2"	**711-131-222 †**
2 Auto. - 3/4" Spin.	2-1/4"	2-1/4"	**711-134-222 ***
00 & 00G Auto.	1-3/4"	1/2"	**711-136-100**
0 & 0G Auto.	2-1/4"	1-1/4"	**711-136-120**
2 & 2G Auto & 3	3"	1-1/2"	**711-136-122**

† These Tool Posts accommodate extra wide circular tools.
* Tool Posts Nos. 711-133-222 and 711-134-222 are for use on the 3/4" capacity No. 2 Machines only. They hold 2-1/4" diameter tools which are normally used on No. 0 Machines.

For hook bolts see page A-7

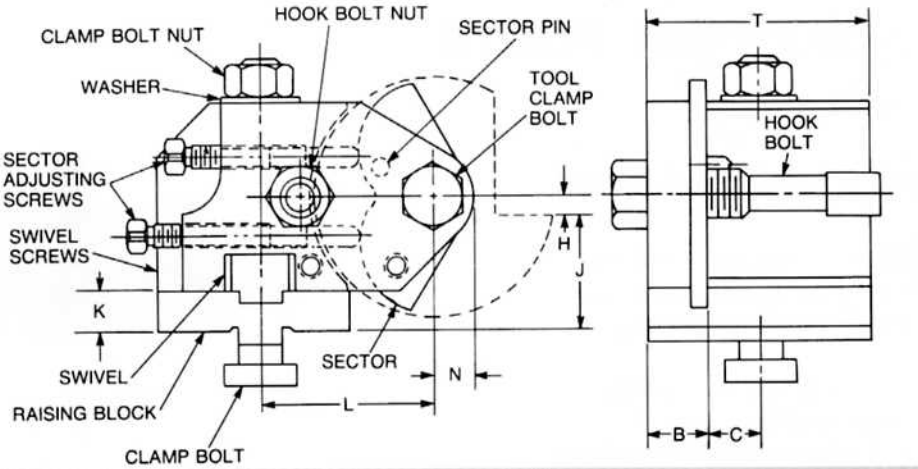

Tool No.	B	C	H	J*	K	L	N	T
				Inches				
				Tool Posts - Front				
711-130-222	25/32	1-5/32	1/4	1-7/16	1/2	2-5/32	17/32	3-5/16
711-133-222	25/32	15/32	5/32	1-7/16	5/16	2-1/2	17/32	2-7/16
711-135-100	7/16	3/8	1/8	1	1/4	1-5/16	3/8	1-11/16
711-135-120	19/32	13/32	5/32	1-5/16	5/16	1-3/4	7/16	2
711-135-122	3/4	21/32	1/4	2-1/2	1/2	5/32	1/2	2-13/16
				Tool Posts - Back				
711-131-222	25/32	1-5/32	1/4	1-7/16	1/2	2-5/32	17/32	3-5/16
711-134-222	25/32	15/32	5/32	1-7/16	5/16	2-1/2	17/32	2-7/16
711-136-100	7/16	3/8	1/8	1	1/4	1-5/16	3/8	1-11/16
711-136-120	19/32	13/32	5/32	1-5/16	5/16	1-3/4	7/16	2
711-136-122	3/4	21/32	5/32	1-5/16	1/2	2-5/32	1/2	2-13/16

*** J dimension indicates distance from center of spindle to top of cross slide.**

Tool No.-Front Tool No.-Back	711-130-222 711-131-222	711-133-222 711-134-222	711-135-100 711-136-100	711-135-120 711-136-120	711-135-122 711-136-122
Swivel	211-13580	211-13611-1	211-13551	211-13565	211-13580
Rising Block (Back)	211-13581	211-13614	211-13662	211-13564	211-13581
Rising Block (Front)	NONE	NONE	211-13557	NONE	NONE
Clamp Bolt	211-13582	211-13582	211-13587	211-13016	211-13582
Sector	211-13575	211-13301	211-13552	211-13566	211-13575
Eccentric Pin	NONE	NONE	211-13553	211-13567	NONE
Sector Pin	211-13576	211-13576	NONE	NONE	211-13576
SectorAdj. Scr. Long	211-13578	211-13302	211-13558	NONE	211-13578
Sector Adj. Scr. Short	211-13579	211-13578	NONE	NONE	211-13579
Tool Clamp Screw	211-13014-2	211-13615-2	211-13518-1	211-13519	211-13577
Tool Post Nut	92-6015-1628	92-6015-1628	92-6015-1221	211-13015	92-6015-1628
Tool Post Washer	92-2040-2604-32	92-2040-1604-32	NONE	NONE	92-2040-1604-32
Hook Bolt Nut	92-6015-1628	92-6015-1628	NONE	NONE	NONE
Body (Front)	211-13002-1	211-13609-1	211-13550	211-13563	211-13574
Body (Back)	211-13102-1	211-13610-2	211-13659	211-13673	211-13686
Swivel Screws-Long	92-5391-1232	92-5070-1228	NONE	92-5070-1024	92-5391-1232
Swivel Screws-Short	92-5391-1220	92-5071-1216	NONE	NONE	92-5391-1220
Hook Bolt-Front-Short	NONE	211-13583	211-13556	211-13568	211-13583
Hook Bolt-Rear-Short	NONE	211-13583	211-13660	NONE	211-13583
Hook Bolt-Front-Med.	NONE	211-13585	211-13554	211-13568	211-13585
Hook Bolt-Rear-Med.	NONE	211-13585	211-13661	211-13671	211-13585
Hook Bolt-Front-Long	211-13017	NONE	211-13555	211-13570	211-13584
Hook Bolt-Rear-Long	211-13017	NONE	211-13662	211-13672	211-13584

For help in selecting Hook Bolts, see page A-6.

CUTTING-OFF TOOL POSTS

For Front and Back Cross Slides

These Cutting-Off Tool Posts are of strong, simple design. They are adjusted easily and resharpened blades can be reset quickly.

The blades cut freely and eliminate excessive friction. These tool posts are for use on Automatic Screw Machines and also on Hand Screw Machines with the raising blocks regularly furnished with each machine. They can also be used on Wire Feed Machines. One hardened T blade is furnished.

Machines Where Used	Tool No.
No. 146 Tool Posts - Low Back	
00&00G Auto., 00 Hand	**711-146-100**
0 & 0G Auto., 0 Hand	**711-146-120**
2 & 2G Auto., 2 Hand, 3	**711-146-122**
No. 147 Tool Posts - High Back	
00 Auto. and Hand	**711-147-100**
0 Auto. and Hand	**711-147-120**
2 Auto. and Hand, 3	**711-147-122**
00 Auto. and Hand	**711-147-200 *†**
2 Auto. and Hand, 3	**711-147-222 *†**
No. 148 Tool Posts- Low Front	
00&00G Auto., 00 Hand	**711-148-100**
0 & 0G Auto., 0 Hand	**711-148-120**
2 & 2G Auto., 2 Hand, 3	**711-148-122**

Johnson Type Blades

Machine	Use Clamp No.
No. 00 Machines	211-14614
No. 0, No. 2 Machines	211-14810

* Use either T-Cut or Johnson Type blades. (Both clamps furnished.)
† Provide adjustment for blade overhang. Adjustable rocker arrangement in the base provides minimum blade extension for greater rigidity in cutting (ideal for carbide applications). These tool posts are also adjustable for horizontal squareness with the spindle.

711-146-

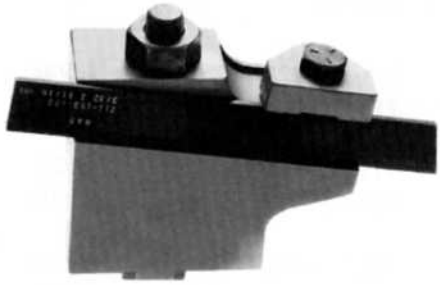

711-147-

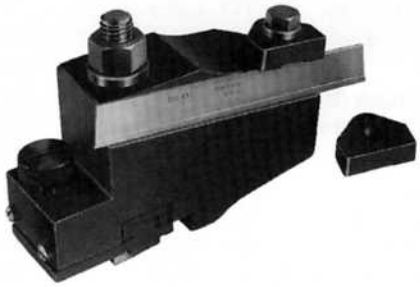

711-147-

711-148-

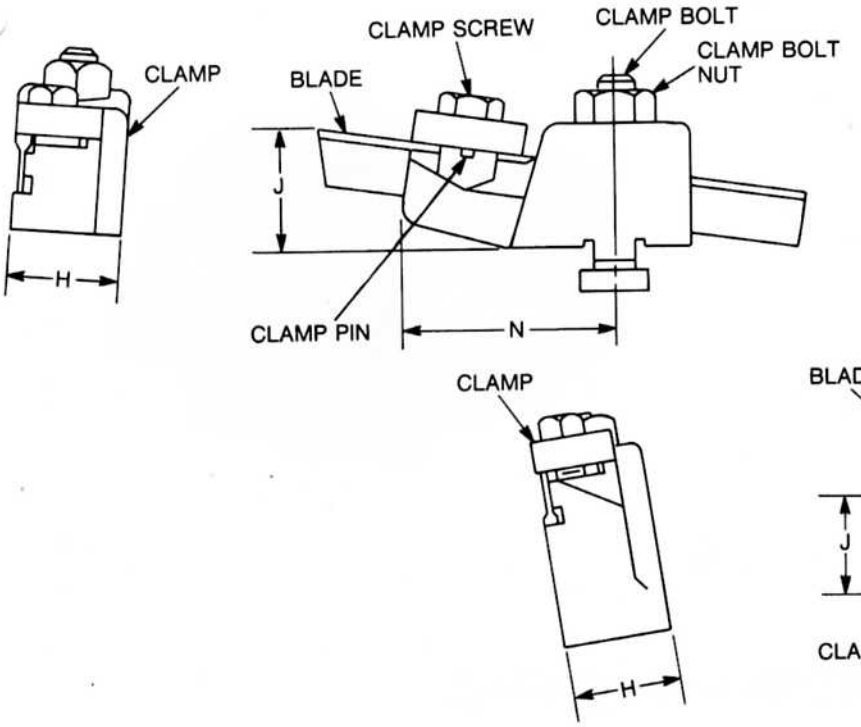

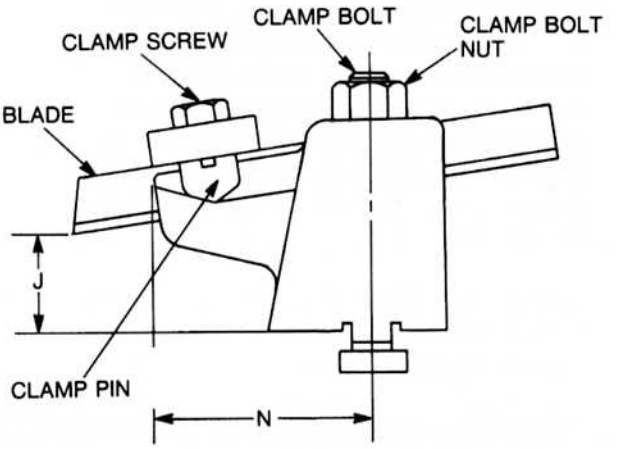

Tool Size	Inches H	J	N	Blade Width
100	1	1	1-7/8	1/2
120	1-1/4	1-5/16	2-3/8	11/16
122	1-3/8	1-7/16	2-27/32	11/16
200	1-7/32	1	2-1/8	1/2
222	1-5/8	1-7/16	3-11/32	11/16

Tool No.	711-146-100	711-146-120	711-146-122	711-147-100	711-147-120	711-147-122
Clamp	211-14708-1	211-14713-1	211-14713-1	211-14708-1	211-14713-1	211-14713-1
Body	211-14607	211-14608	211-14609	211-14707	211-14710	211-14709
Clamp Screw	92-5035-824	92-5035-1032	92-5035-1032	92-5035-824	92-5035-1032	92-5035-1032
Clamp Bolt	92-5020-1244	211-14804	92-5020-1650	91-502-13	211-13016	92-5020-1662
Clamp Bolt Nut	92-6015-1221	211-13015	92-6015-1628	92-6015-1221	211-13015	92-6015-1628
Pin	92-900-414	NONE	NONE	NONE	NONE	NONE
"T" Blade	711-153-200	711-153-122	711-153-122	711-153-200	711-153-122	711-153-122

Tool No.	711-147-200	711-147-222	711-148-100	711-148-120	711-148-122
Clamp "T"	211-14708-1	211-14713-1	211-14708-1	211-14713-1	211-14713-1
Body	211-14707-1	211-14709-1	211-14801	211-14803	211-14805
Clamp Screw	211-14615	211-14811	92-5035-824	92-5035-1032	92-5035-1032
Clamp Bolt	211-13587	92-5020-1662	92-5020-1244	211-14804	92-5020-1650
Clamp Bolt Nut	211-14617	211-14812	92-6015-1221	211-13015	92-6015-1628
"T" Blade*	711-153-200	711-153-122	711-153-200	711-153-122	711-153-122
Swivel	211-14611	211-14806			
Guide Plate	211-14612	211-14807			
Adjusting Screw	211-14613	211-14808			
Tool Clamp "Johnson"	211-14614	211-14810			
Clamp Scr. Washer	211-14616	92-2060-16			
Spring	92-1000-612-26	92-1000-620-26			
Clamp Bolt Washer	92-2060-12	92-2060-16			

*For additional blades see page 117.

TOOL POSTS FOR SQUARE TOOLS

Compact - Easily Adjusted - Rigid Blade Support

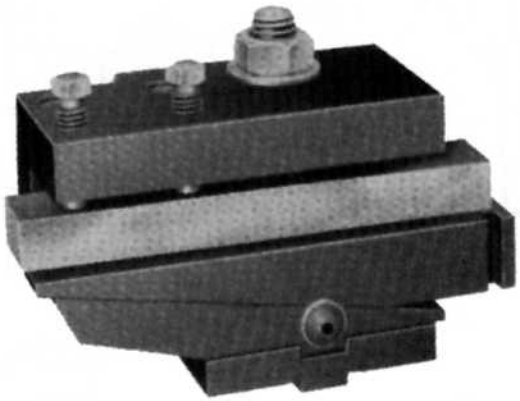

These tool posts have a rigid wedge support, are compact and easily adjusted. They are furnished either for use on the front cross slide or on the back cross slide. A raising block is included with each tool so that it can be used with the spindle running in either direction. They are furnished with one hardened blade.

The No. 162 Universal Tool Post for Square Tools is supplied with a raising block and one hardened blade.

Machines Where Used	Tool Height	Tool Width	Tool No.
No. 160 Tool Posts — Front			
0 & 0G Auto.	1/2"	5/8"	**711-160-220**
2 & 2G Auto. & 3	1/2"	3/4"	**711-160-322**
No. 161 Tool Posts — Back			
0 & 0G Auto.	1/2"	5/8"	**711-161-220**
2 & 2G Auto. & 3	1/2"	3/4"	**711-161-322**
No. 162 Universal Tool Post			
00 & 00G Auto.	3/8"	7/16"	**711-162-100**

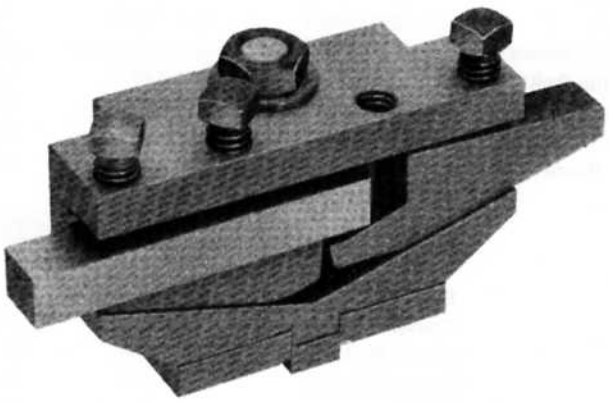

Universal

NOS. 160-220 AND 161-220

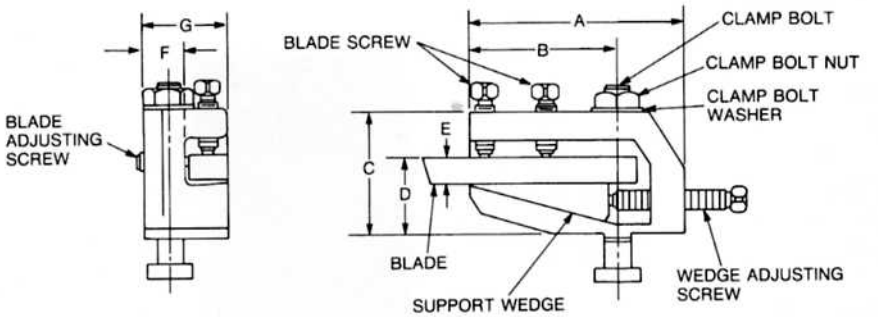

NOS. 160-322 AND 161-322

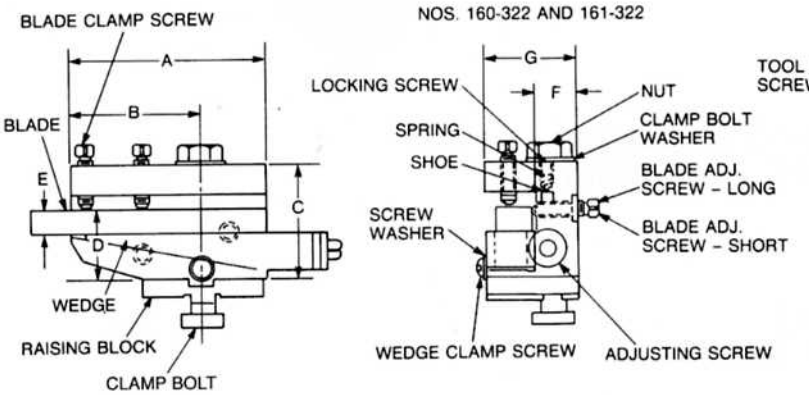

UNIVERSAL TOOL POST FOR SQUARE TOOLS

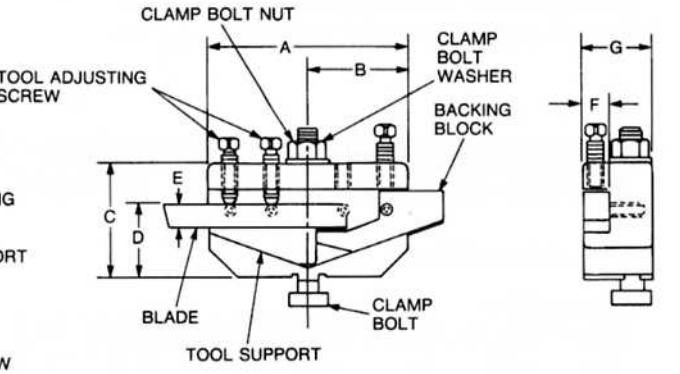

	Inches						
Tool No.	**A**	**B**	**C**	**D**	**E**	**F**	**G**
Tool Posts for Square Tools							
711-160-322	**4-1/8**	**2-3/4**	**2-11/32**	**1-7/16**	**1/2**	**7/8**	**1-15/16**
711-161-322	**4-1/8**	**2-3/4**	**2-11/32**	**1-7/16**	**1/2**	**7/8**	**1-15/16**
Tool Posts for Square Tools							
711-160-220	**3-1/4**	**2**	**2-3/16**	**1-5/16**	**1/2**	**13/16**	**1-7/16**
711-161-220	**3-1/4**	**2**	**2-3/16**	**1-5/16**	**1/2**	**13/16**	**1-7/16**
Universal Tool Post for Square Tools							
711-162-100	**3-1/4**	**1-5/8**	**1-1/2**	**1**	**3/8**	**7/16**	**1-1/8**

Tool No.	**711-160-220 711-161-220**	**711-160-322 711-161-322**	**711-162-100**
Blade Screw	92-5191-1028	92-5191-1032	92-5191-1016
Blade Adj. Scr. - S	92-5391-1024	92-5391-1020	92-5391-810
Blade Adj. Scr. - L	92-5391-1024	92-5391-1032	92-5391-820
Clamp Bolt	211-13016	92-5020-1660	92-5020-1250
Clamp Bolt Washer	92-2040-1404-28	92-2040-1602-32	92-2040-1202-24
Clamp Bolt Nut	211-13015	92-6015-1620	92-6015-1214
Wedge	211-16011	211-16009-1	211-16212
Wedge Adj. Scr.	92-5010-1048	211-16013-1	NONE
Rising Block	211-16012	211-16010-1	211-16214
Body - Front	211-16002-1	211-16003-2	211-16211-1
Body - Back	211-16102-1	211-16103-2	NONE
Blade	711-94089	711-94090	711-94084
Wedge Clamp Screw	NONE	92-5385-812	NONE
Wedge Cl. Scr. Washer	NONE	92-2040-802-16	NONE
Locking Screw	NONE	92-5071-1010	NONE
Lock Screw Spring	NONE	92-1000-816-22	NONE
Locking Screw Shoe	NONE	92-5930-806	NONE
Backing Block	NONE	NONE	211-16213

NO. 163 VERTICAL SLIDE TOOL HOLDER

This holder can be used in place of the regular vertical slide cut-off tool holder and will permit the vertical slide to be used for light forming operations. It has been designed for use on all 00 machines before the Ultramatics with vertical slide attachments. The tool holder may be used for right-hand cutting only, this being the most popular direction of cut in screw machine work. One hardened blade is included with each holder.

Machines Where Used	Blade	Tool No.
#00 (With vertical slide attachment)	1/4" X 3/8"	**711-163-100**

For additional Blades, see page 107.

Dimensions

A	B	C	D	E	F	G
3/8	1/4	1/2	3/32	11/16	1/2	1/4

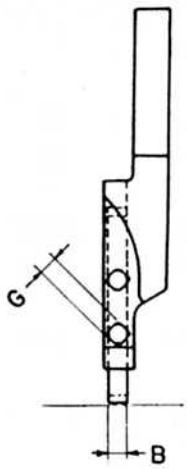

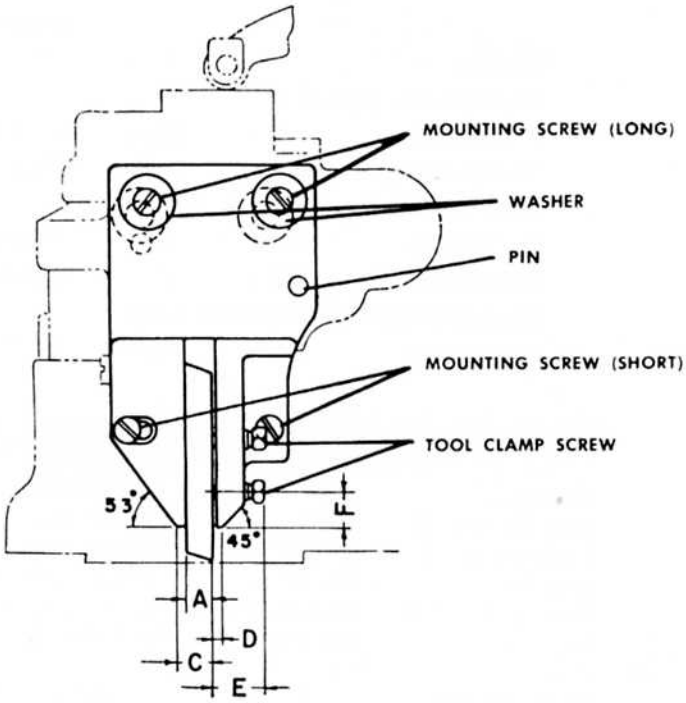

Tool No.	711-163-100
Pin	92-900-832
Tool Clamp Screw	92-5012-816
Mounting Scr. - L	92-5050-832
Mounting Scr. - S	92-5051-820
Washer	211-16302
Body	211-16301
Blade	711-94076

VERTICAL SLIDE TOOL HOLDERS

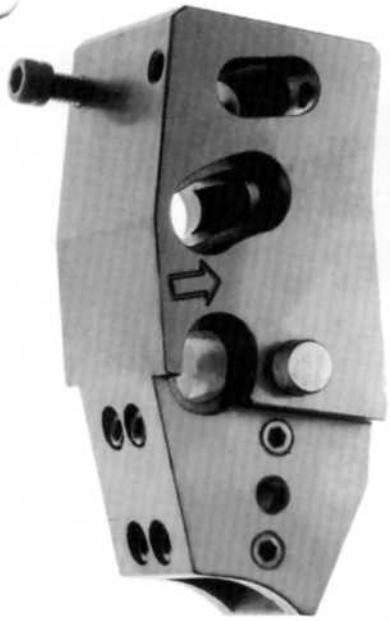

Tool holders, both cut-off and forming, are available for use on the front and back upper slides of #00 and #2 Ultramatic Machines.

Holder	Machines Where Used	Tool No.
Cut-off - Forward	#00 Ultramaric	**42-21719**
Cut-off - Backward	#00 Ultramatic	**42-21721**
Form Tool - Forward (1/2" Wide Tools)	#00 Ultramatic	**42-21741**
Form Tool - Backward (1/2" Wide Tools)	#00 Ultramatic	**42-21743**
Cut-off - Forward	#2 (Ser# 542-2-5601 to 7746 and 542-3-51 to 319)	**42-17058-3-99**
Cut-off - Backward	#2 (Ser# 542-2-5601 to 7746 and 542-3-51 to 319)	**42-19348-99**
Cut-off - Forward	#2 Ultramatic (Ser# 542-2-7747 and up and 542-3-320 and up)	**42-17058-4**
Cut-off - Backward	#2 Ultramatic (Ser# 542-2-7747 and up and 542-3-320 and up)	**42-19348-1**
Form Tool - Forward 1/2"	#2 Ultramatic (Ser# 542-2-5601 to 7746, 542-3-51 to 319)	**42-19264-4**
Form Tool - Forward & Backward 1/2"	#2 Ultramatic (Ser# 542-2-7747 and up, 542-3-320 and up)	**42-19264-5**
Form Tool - Backward 1/2"	#2 Ultramatic (Ser# 542-2-5601 to 7746, 542-3-51 to 319)	**42-19262-3**
Form Tool Forward & Backward (1" Wide)	#2 Ultramatic (Ser# 542-2-7747 and up and 542-3-320 and up)	**42-21569**

For additional Blades, see page 116.

NO. 165 COMBINATION RIGHT AND LEFT-HAND KNEE TOOLS

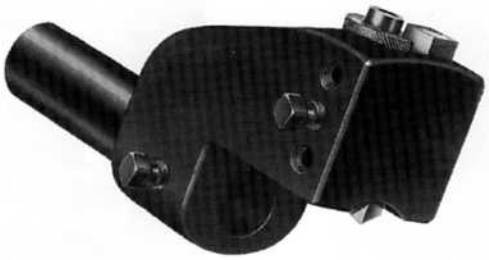

Fastest Setting Turning Tool Available

These tools can be used for either right or left-hand turning simply by changing the blade screws from one side of the tool to the other. The adjusting screw permits you to make fine radial adjustment of the cutting blade. The blade can be ground for turning a sharp shoulder that is perpendicular to the centerline of the piece. Shank holds centering tool, counterbore, drill or similar tool for simultaneous internal cutting. One slotted hardened blade is furnished.

Shank Dia.	Turning Capacity Length	Turning Capacity Diameter	Tool No.
5/8"	5/8"	up to 3/4"	**711-165-100**
	†	up to 3/8"	
3/4"	1"	up to 7/8"	**711-165-120**
	†	up to 15/32"	
1"	1-3/4"	up to 1-5/8"	**711-165-122**
	†	up to 21/32"	
1-1/4"	†	up to 21/32"	**711-165-123**
	2-1/2"	21/32" to 3/4"	
	1/2"	3/4" to 2.4"	

† Turned diameter will pass through shank bore.
For Blades see page 116.

Slotted Blades

For Tool No.	Size	Tool No.
711-165-100	1/4x1/4x1-1/8	**211-94053-1**
711-165-120	5/16x5/16x1-7/16	**211-94056-1**
711-165-122	3/8x3/8x1-7/8	**211-94052-1**
711-165-123	3/8x3/8x1-7/8	**211-94052-1**

Order quality Tool Holders, Collets and Feeding Fingers from the B & S authorized stocking distributor in your area.

B&S

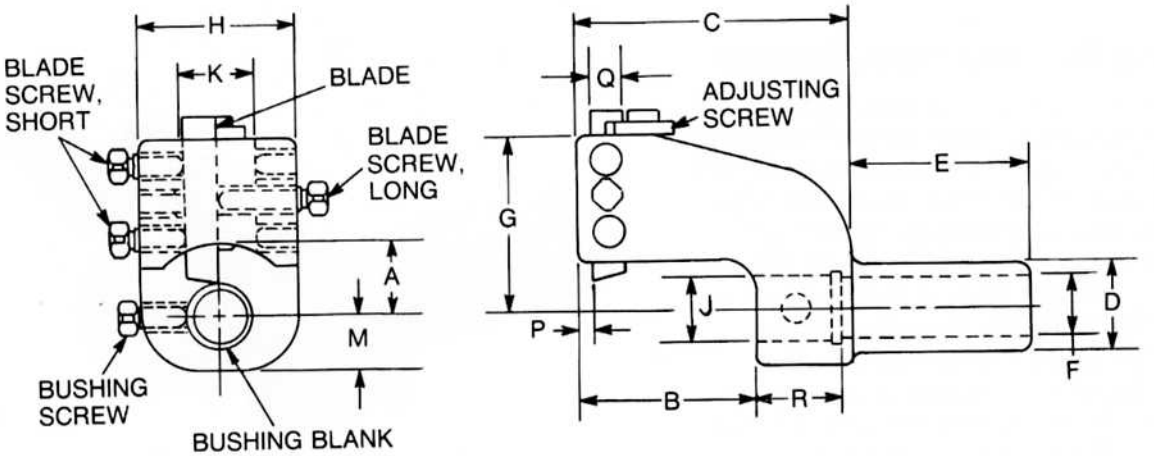

Tool No.	A	B	C	D	E	F	G	H	J	K	M	P	Q	R
	Inch													
711-165-100	13/32	3/4	1-3/8	5/8	1-5/8	7/16	1-3/16	1-1/4	1/2	9/16	3/8	3/32	1/4	1/2
711-165-120	9/16	1-1/4	2-1/4	3/4	2	1/2	1-11/16	1-1/2	5/8	11/16	1/2	1/8	5/16	13/16
711-165-122	7/8	1-15/1	3	1	2	11/16	2	1-3/4	3/4	13/16	5/8	1/8	3/8	15/16
711-165-123	1-5/16	1-3/4	2-5/8	1-1/4	2	11/16	2-1/2	3/16	3/4	13/16	11/16	9/64	3/8	31/32

Note: Turning length is unlimited when workpiece will pass through tool shank.

Tool No.	711-165-100	711-165-120	711-165-122	711-165-123
Adjusting Screw	211-16504	211-16505	211-16506-1	211-16506-1
Blade Screw-Short	92-5191-612	92-5191-814	92-5191-1016	92-5191-1016
Blade Screw-Long	92-5191-620	92-5191-824	92-5191-1028	92-5191-1028
Bushing Screw	92-5191-612	92-5191-814	92-5191-1016	92-5012-1020
Body	211-16501-1	211-16502	211-16503-1	211-16507
Blade*	211-94053-1	211-94056-1	211-94052-1	211-94052-1

*For additional blades, see page 116.

NO. 172 COMBINATION RIGHT AND LEFT-HAND ADJUSTABLE CENTERING AND FACING TOOLS

Aligns Tool Head with Spindle!

These tools offer a blade and center drill on a head which can be adjusted with relation to the tool body. This lets you center the drill to the work in the spindle, thereby eliminating the need for grinding an "off-center" center on the drill. You can change these tools quickly and easily from right-hand to left-hand. Since they are self-contained, there are no extra parts to be lost. This flexibility makes it possible to cut down on your tool inventory, one tool serving a dual purpose. They are furnished with one hardened steel blade and one right-hand center drill.

Shank Dia.	Max. Diameter (Inches)	Tool No.
5/8	1/2	**711-172-200**
3/4	3/4	**711-172-120**
1	1	**711-172-222**

For Blades, see page 116.

B & S Tool Holders incorporate the most effective design for their intended application.

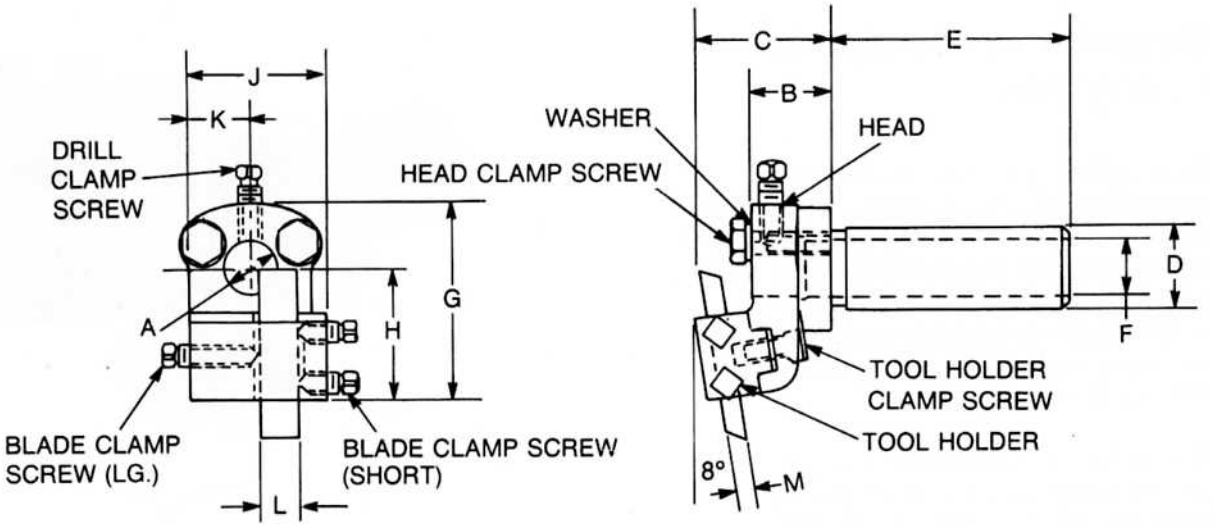

Tool No.	A	B	C	D	E	F	G	H	J	K	L	M (Blade)
	Inches											
711-172-200	5/16	11/16	1-3/16	5/8	1-1/2	3/8	1-19/32	1-3/32	1-3/16	1/2	5/16	1/4x5/16
711-172-120	3/8	15/16	1-19/32	3/4	2	1/2	2-13/32	1-19/32	1-11/16	3/4	1/2	1/4x1/2
711-172-222	5/8	15/16	1-19/32	1	2-7/8	11/16	2-13/32	1-19/32	1-11/16	3/4	1/2	1/4x1/2

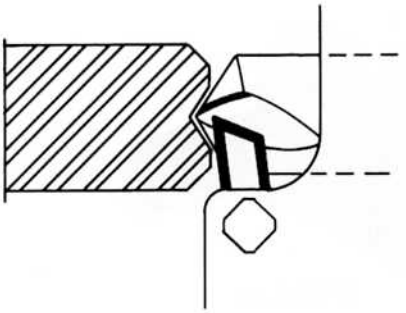

Tool No.	711-172-200	711-172-120	711-172-222
Head	211-17201-3	211-17209	211-17204-2
Head Clamp Scr.	211-17208	472-344	472-344
Washer	211-10545-1	92-2040-802-16	92-2040-802-16
Tool Holder	211-17203	211-17206	211-17206
Tool Holder Cl. Scr.	92-5380-816	92-5380-816	92-5380-816
Blade Clamp Scr.-L	92-5191-818	92-5191-828	92-5191-828
Blade Clamp Scr.-S	92-5191-814	92-5191-814	92-5191-814
Right Hand Ctr. Drill	211-96001	211-96002	211-96003
Drill Clamp Screw	92-5012-816	92-5010-824	92-5010-824
Shank	211-17207-1	211-17210	211-17211
Blade	711-94075	711-94078	711-94078

POINTING TOOLS WITH CARBIDE "V" BACK RESTS

Support Work Ahead of the Cutting Tools

Pointing Tools are used for pointing or facing the outer end of a piece that requires support. In some cases they are used to turn a short length on the end of the work. Their blades cut tangentially and are set in the body and adjusted like box tool blades. A set screw is provided for clamping a center drill or drill in the shank.

The "V" back rest is important, especially when pointing long slender pieces, as it prevents runout and makes possible pointing that will be concentric to the turned diameter. The back rest is set to precede the blade and is adaptable to work of any diameter within the capacity of the tool.

Back rests on Tool 175-300 are carbide, having an indefinitely long-wear life. Supplied with one hardened blade and one set of back rests.

Pointing Tool 175-400 uses a work support bushing to support the work in place of a "V" back rest.

Shank Dia.	Inch Dia.	Tool No.
5/8"	1/2	**711-175-300**
5/8"	*	**711-175-400**

* Bushing hole size 3/8" diameter.
For blades see page 116.

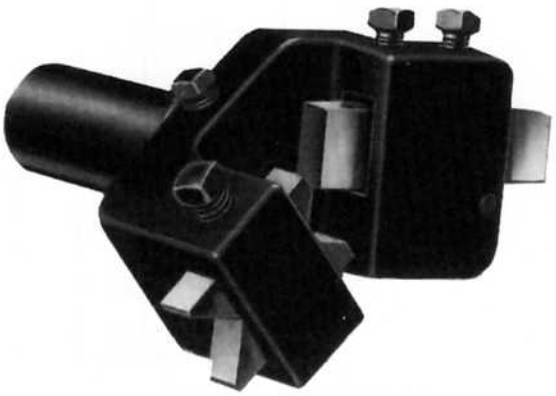

175-300

175-400

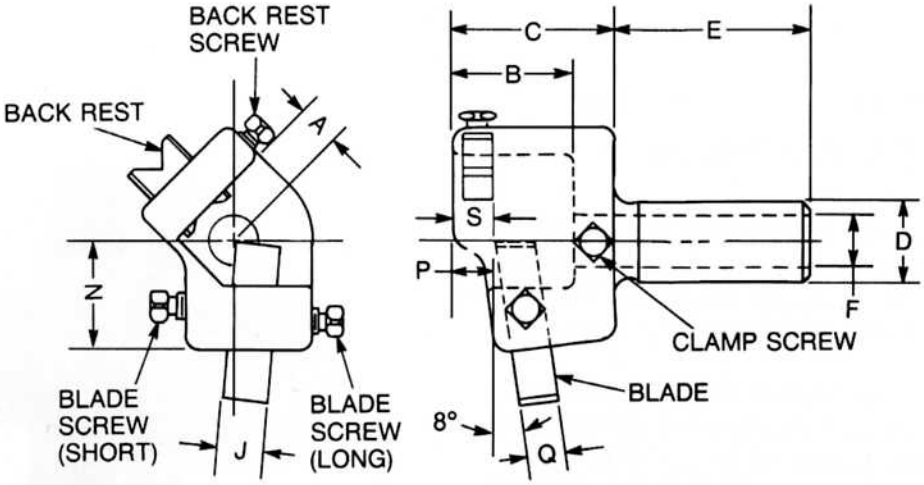

	Inches										
Tool No.	A	B	C	D	E	F	J	N	P	(Blade)	S
711-175-300	5/16	25/32	1-5/32	5/8	1-5/16	5/16	5/16	7/8	1/4	5/16 x5/16	13/32

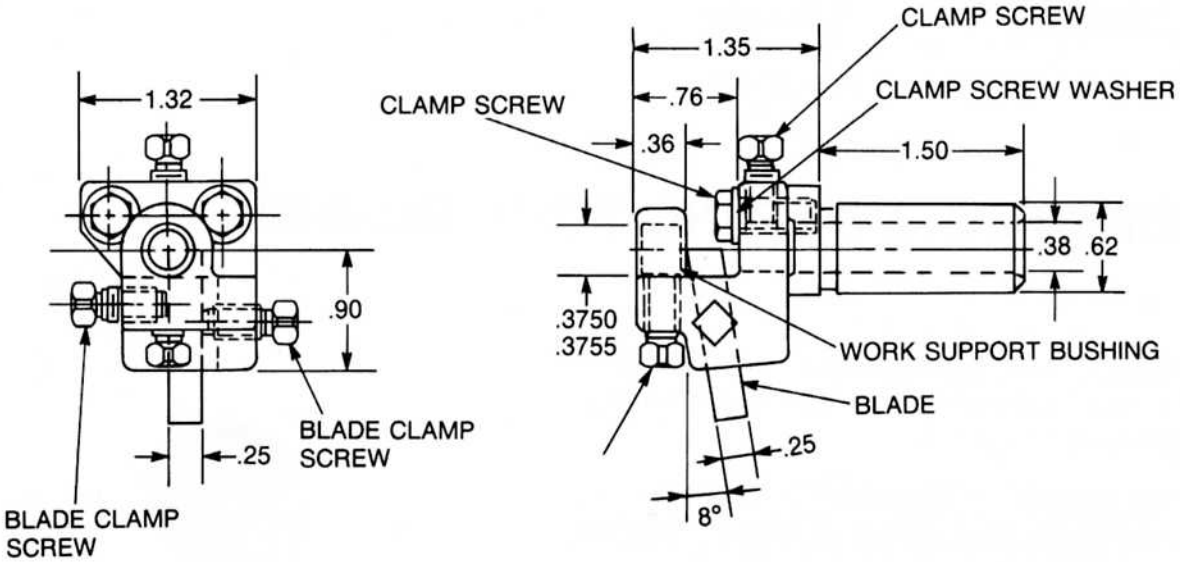

Tool No.	711-175-300	711-175-400
Blade Screw	92-5191-814	92-5191-814
Blade Screw-Long	92-5191-814	NONE
Carbide Back Rest	211-93019-1	NONE
Back Rest Screw	92-5012-816	NONE
Drill Clamp Screw	92-5390-812	92-5010-824
Body	211-17501-1	NONE
Blade	711-94080	711-94074
Head	NONE	211-17517
Work Bushing	NONE	211-17518
Shank	NONE	211-17207-1
Clamp Screw	NONE	211-17519
Clamp Screw Washer	NONE	211-10545-1

NO. 180 POINTING TOOL HOLDERS FOR CIRCULAR TOOLS

Most Economical Means for Finishing Ends of Work

Circular Pointing Tool Holders are used for pointing or forming the end of short, rigid work pieces where no support is required. The circular tool may be removed readily for grinding.

The holders are made in two sections so you can easily center the cutting tool with the work. They are easily adjusted for right or left hand use. One hardened tool blank is supplied with the holder.

Shank Dia.	Tool No.
1"	**711-180-122**

CIRCULAR POINTING TOOL BLANKS

Circular Pointing Tool Blanks are for use with the Pointing Tool Holders. Blanks are made from high speed steel, hardened.

For use with Tool Holder No.	Diameter of Hole	O.D.	Tool No.
711-180-100	3/8"	1-1/8"	**211-18009**
711-180-120	3/8"	1-3/8"	**211-18010**
711-180-122	1/2"	1-3/4"	**211-18008**

B & S Tool Holders incorporate the most effective design for their intended application.

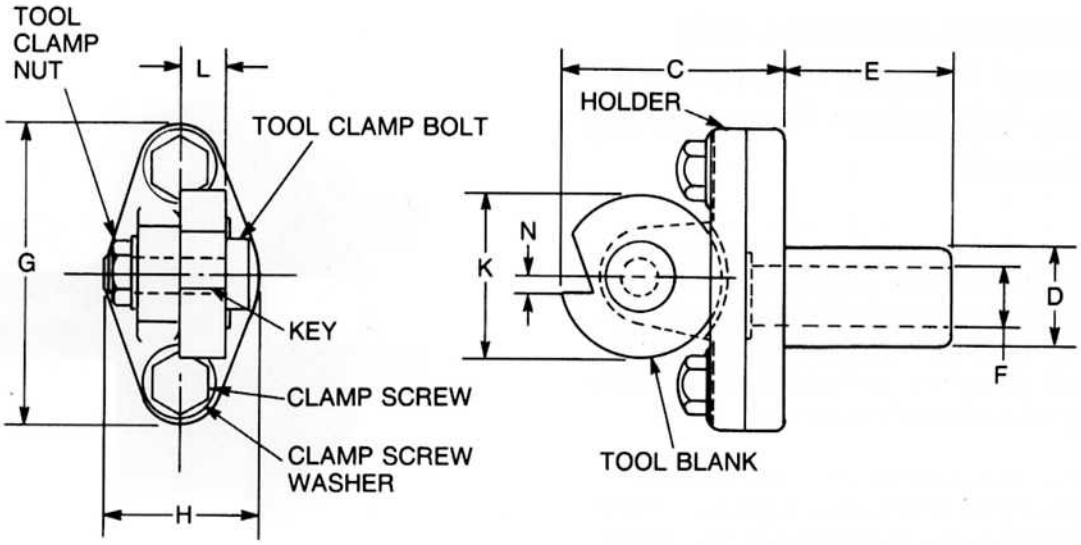

	Inches								
Tool No.	**C**	**D**	**E**	**F**	**G**	**H**	**K**	**L**	**N**
711-180-122	**2-5/16**	**1**	**1-25/32**	**5/8**	**3-1/4**	**1-3/4**	**1-3/4**	**1/2**	**1/8**

Tool No.	**711-180-122**
Holder	211-18006
Clamp Screw Washer	92-2040-1202-24
Clamp Screw	92-5035-1224
Holder Key	92-970-412
Tool Clamp Bolt	211-18012
Tool Clamp Nut	92-6015-1214
Shank	211-18003
Tool Blank	211-18008

NO. 183 ADJUSTABLE TREPANNING TOOL

Eliminates Need for Costly Special Tools for Trepanning - Fully Adjustable - Faster Setting - Versatile

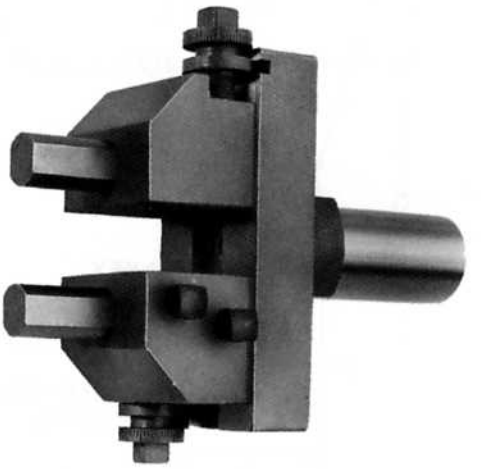

Now, trepanning can be performed quickly and effectively with a tool designed specifically for trepanning and end-working operations. Ruggedly built, this new tool utilizes two blades which can be adjusted by means of graduated adjusting screws.

Blades have flats ground on two sides to facilitate preparation of cutting edges and to ensure they will maintain the set position in the tool.

Where many special tools were required for producing grooves, recesses, ways and other features on the ends of parts, a single trepanning tool can perform all of these operations faster and more accurately.

Blades can be set to cut for roughing and finishing or for cutting two diameters simultaneously. The tool is supplied with two blades.

	Capacity		
Shank Dia.	**Min. Dia.**	**Max. Dia.**	**Tool No.**
1"	.3"	2.38"	**711-183-122**

Blades for Trepanning Tool are 211-18304.

Over 150 years of quality and craftsmanship have gone into the design and manufacture of all B & S Tool Holders.

B&S

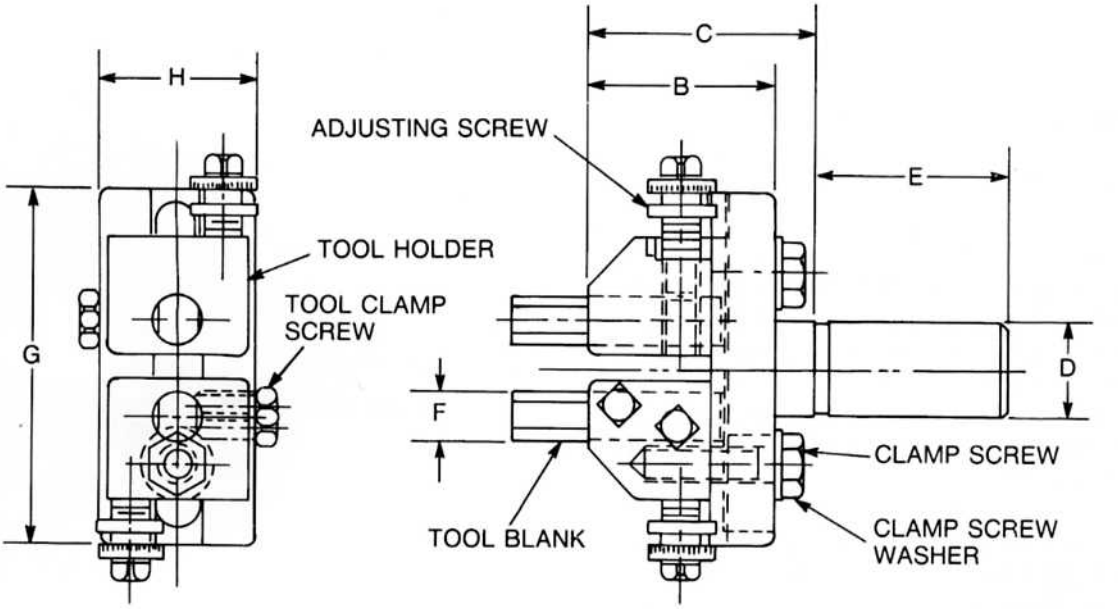

	Inches						
Tool No.	**B**	**C**	**D**	**E**	**F**	**G**	**H**
711-183-122	**1.94**	**2.34**	**1.00**	**2.00**	**.50**	**3.70**	**1.60**

Tool No.	**711-183-122**
Tool Holder	211-18302
Adjusting Screw	211-18303
Tool Blank	211-18304
Tool Clamp Screw	92-5010-1020
Clamp Screw	92-5035-1236
Washer	92-2040-1202-24
Shank	211-18301

NO. 185 ADJUSTABLE KNURL HOLDERS

Increase Capacities with Greater Rigidity!

These Knurl Holders have a bushing arrangement which facilitates the rapid adjustment or replacement of knurls. Loosening two screws allows the bushing, the adjusting screw, and the swivel to be adjusted or removed as a unit. Under actual production conditions, set-up time has been reduced as much as 50%.

These holders have ruggedness and rigidity and use full machine capacities. Carbide Knurl Pins are provided for long life. Knurl not furnished.

Shank Dia.	Knurl Size I.D.x O.D.x W.	Knurling Capacity Length	Knurling Capacity Diameter	Tool No.
5/8"	3/16" X 1/2" X 3/16"	1-1/6"	from 1/16" to 1/2"	**711-185-200**
		5/8"	from 1/2" to 3/4"	
3/4"	1/4" X 5/8" X 1/4"	1-3/4"	from 1/8" to 9/16"	**711-185-220**
		15/16"	from 9/16" to 3/4"	
1"	1/4" X 5/8" X 1/4"	2-1/2"	from 3/16" to 15/16"	**711-185-322**
		1-3/8"	from 15/16" to 1-5/8"	
1-1/4"	1/4" X 3/4" X 1/4"	1.4"	from 1-13/32" to 2-13/32"	**711-185-123**
1-1/4"	1/4" X 3/4" X 3/8"	*	from 3/16" to 9/16"	**712-185-1125**
		3-1/2"	from 9/16" to 1-11/16"	
		2"	from 1-11/16" to 2-1/16"	
1-1/2"	1/4" X 3/4" X 3/8"	*	from 3/16" to 11/16"	**712-185-1150**
		3-1/2"	from 11/16" to 1-11/16"	
		2"	from 1-11/16" to 2-1/16"	
1-3/4"	1/4" X 3/4" X 3/8"	*	from 3/16" to 15/16"	**712-185-1175**
		3-1/2"	from 15/16" to 1-11/16"	
		2"	from 1-11/16" to 2-1/16"	

* Turned diameter will pass through shank bore
For Knurls, see pages 118 to 122.
For other Knurl Holders, see Tools, pages 44 and 90.

Order quality Tool Holders, Collets and Feeding Fingers from the B & S authorized stocking distributor in your area.

B&S

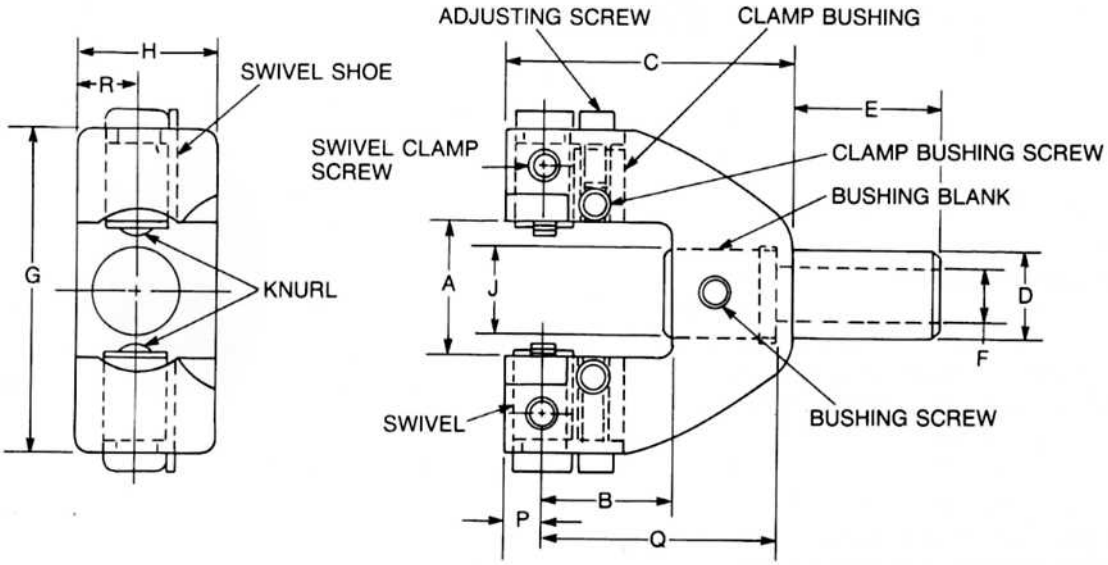

Tool No.	A	B	C	D	E	F	G	H	J	P	Q	R
	Inches											
711-185-200	7/8	5/8	1-5/8	5/8	1-1/8	3/8	2	1-1/6	1/2	11/32	1-5/32	7/16
711-185-220	1	1-1/16	2- 7/16	3/4	1-1/2	7/16	2-3/4	1-3/8	5/8	7/16	1-7/8	9/16
711-185-322	1-5/8	1-1/2	3- 5/16	1	1-3/4	5/8	3-3/4	1-5/8	1	7/16	2-11/16	11/16
711-185-123	2-1/2	1-3/8	2-13/16	1-1/4	2	11/16	4-5/8	1-3/4	3/4	1/2	2-3/8	3/4
712-185-1125 †	2-1/8	2-1/8	4-1/8	1-1/4	3-3/4	5/8	4-5/8	2	1-3/4	9/16	3-13/16	1
712-185-1150 †	2-1/8	2-1/8	4-1/8	1-1/2	3-3/4	3/4	4-5/8	2	1-3/4	9/16	3-13/16	1
712-185-1175 †	2-1/8	2-1/8	4-1/8	1-3/4	3-3/4	1	4-5/8	2	1-3/4	9/16	3-13/16	1

Note: Knurling Length is limited only by the machine capacity when workpiece will pass through the tool shank. † Have flat on shank.

Tool No.	711-185-200	711-185-220	711-185-322	711-185-123
Swivel Shoe	211-18515	211-18516	211-18516	211-18516
Swivel Clamp Screw	92-5390-808	92-5390-1012	92-5390-1020	92-5390-1016
Swivel	211-18506-4	211-18507-3	211-18508-4	211-18525
Carbide Knurl Pin	211-18512	211-18513	211-18513	211-18526
Knurl Pin Set Screw	472-3520	472-3520	472-3520	92-5071-406
Adjusting Screw	211-18519	211-18520	211-18520	211-18520
Clamp Bushing	211-18518	211-18521	211-18523-1	211-18523-1
Clamp Bushing Screw	92-5390-812	92-5390-1020	92-5390-1020	92-5390-1020
Bushing Screw	92-5390-812	92-5390-1020	92-5390-1020	92-5390-1024
Body	211-18501-5	211-18502-2	211-18503-5	211-18524

Tool No.	712-185-1125	712-185-1150	712-185-1175
Body	212-18504	212-18504	212-18504
Swivel Complete	212-18505	212-18505	212-18505
Shoe	211-18516	211-18516	211-18516
Adjusting Screw	212-18506	212-18506	212-18506
Washer	92-2010-1604-32	92-2010-1604-32	92-2010-1604-32
Clamp Screw	92-5035-1640	92-5035-1640	92-5035-1640
Bushing Clamp Screw	92-5010-1636	92-5010-1636	92-5010-1636
Brass Pin	92-5930-1008	92-5930-1008	92-5930-1008
Swivel Clamp Screw	92-5390-1216	92-5390-1216	92-5390-1216
Shank	212-18501	212-18502	212-18503
Carbide Knurl Pin	211-18514	211-18514	211-18514

SIDE KNURL HOLDERS

Knurl Holders for Cross Slides-
Single Knurl Holders

Single Knurl Holders for Cross Slides
Side Knurl Holders are held straight on either front or back tool posts in the same manner as circular forming tools. They are also adaptable for light thread rolling. Carbide pins are used for long life.

Double Knurl Cross Slide Holder
This 2-knurl holder adds a new dimension to cross slide knurling — diamond knurling using a left and right diagonal knurl. This is a profitable substitute for the cost and inconvenience of using and stocking diamond knurls.

The Double Knurl System provides cleaner straight, diagonal, and diamond knurls —

- through solid contact with the workpiece, so there is less chance of slipping.
- through broader distribution of pressure on the workpiece, minimizing "crushing".
- through a "floating" knurl carrier which is self-centering on the workpiece.
- through a reversible knurl carrier, which allows you to position the knurls closer to the collet for greater rigidity.
- through carbide knurl pins which are highly wear-resistant.

Single Knurl Holders †

For Holders	Knurl Size	Tool No.
00	1/2" X 3/16" X 3/16"	**711-190-100**
0	5/8" X 1/4" X 1/4"	**711-190-120**

Double Knurl Holders †

For Mach. No.	Knurl Size	Tool No.
2*	3/4" X 1/4" X 1/4"	**711-190-222**

* Used with circular tool post No. 711-135-122 for Front Slide, and No. 711-136-122 for Back Slide.
† Knurls not furnished.
For Knurls see pages 118 to 122.

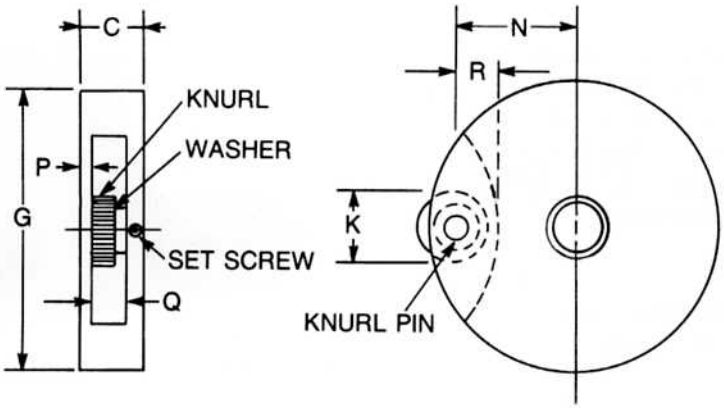

	Inch						
Tool No.	**C**	**G**	**K**	**N**	**P**	**Q**	**R**
711-190-100	**9/16**	**1-3/4**	**1/2**	**21/32**	**1/8**	**1/4**	**13/32**
711-190-120	**21/32**	**2-1/4**	**5/8**	**7/8**	**1/8**	**5/16**	**3/8**

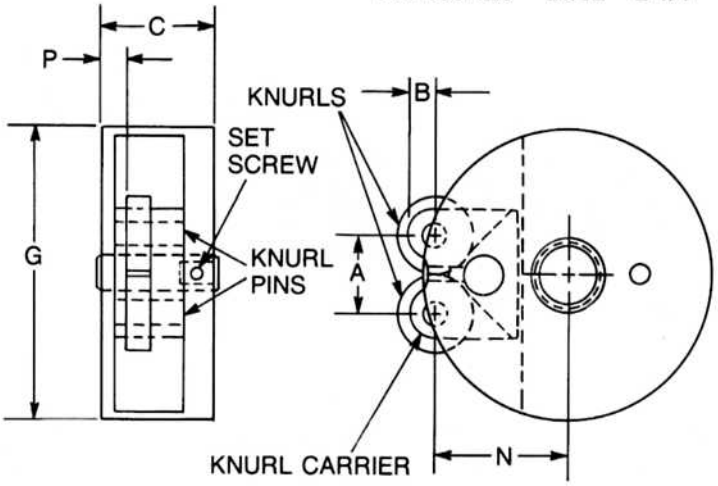

Double Knurl Cross Slide Holder

	Inches					
Tool No.	**A**	**B**	**C**	**G**	**N**	**P**
711-190-222	**8/10**	**1/4**	**1-5/32**	**3**	**1-13/32**	**1/4**

Tool No.	**711-190-100**	**711-190-120**	**711-190-222**
Carbide Knurl Pin	211-19004	211-18513	211-18513
Washer	92-2010-602-14	92-2010-802-16	NONE
Set Screw	472-3520	472-3520	NONE
Knurl Holder	NONE	NONE	211-21103
Knurl Pin Screw	NONE	NONE	92-5390-616
Fulcrum Screw	NONE	NONE	92-5390-612
Knurl Holder Fulcrum	NONE	NONE	211-21104
Body	211-19001-1	211-19002-1	211-19006

KNURLING SWING TOOLS

These tools are used for knurling behind shoulders and for knurling a section at some distance from the end of the piece. They are used also for longitudinal knurling and for light thread rolling. The knurl is held in the swinging arm which is pivoted to the main body of the tool. The arm is actuated by a fixed or an adjustable guide which is mounted on the front cross slide.

The shank is designed to hold a back rest or a special support which can be clamped into position by a set screw. Carbide Pins are used for long life.

The maximum knurl width is 5/16". Two spacers are provided for use with standard 3/16" knurls.

Shank	Max.	Knurling Capacity (Inches)		
Dia.	Knurl Size	Length	Diameter	Tool No.
5/8"	1/2" X 3/16" X 3/16"	1/2"	up to 1/2"	**711-210-100**
		†	up to 3/8"	

† Turned diameter will pass through shank bore.
For Guides, see page 94.
For Backrest, see page 92.
For Slide Tool with 1" shank, see Tool No. 711-211-222, page 44.
For Knurls, see pages 118 to 122.

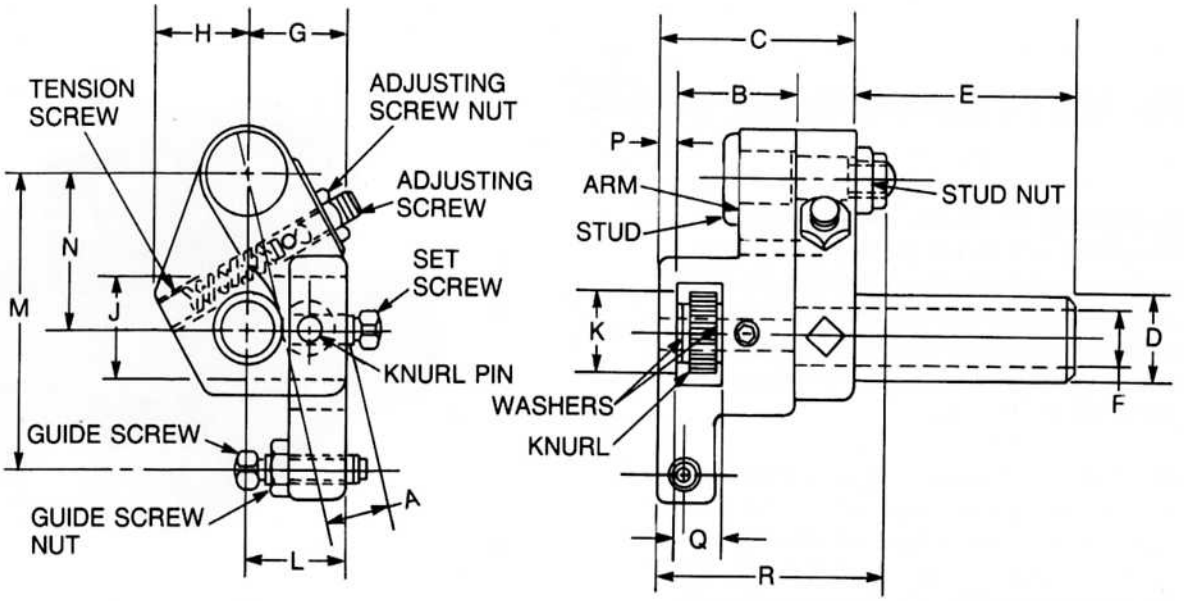

	Inches															
Tool No.	**A**	**B**	**C**	**D**	**E**	**F**	**G**	**H**	**J**	**K**	**L**	**M**	**N**	**P**	**Q**	**R**
711-210-100	**1/2**	**3/4**	**1-1/4**	**5/8**	**1-1/4**	**7/16**	**1**	**3/4**	**11/16**	**1/2**	**5/8**	**1-13/16**	**7/8**	**1/8**	**5/16**	**1-7/16**

Tool No.	**711-210-100**
Carbide Knurl Pin	211-21006
Arm	211-21003-2
Washer	92-2040-602-12
Guide Screw	92-5191-624
Guide Screw Nut	92-6010-611
Set Screw	92-5390-606
Stud	211-21009-1
Stud Nut	472-153
Plunger	211-21012
Clamp Screw	92-5390-620
Adjusting Screw	92-5390-620
Adjusting Screw Nut	92-6010-611
Tension Screw	92-5071-808
Spring	92-1000-632-20
Tension Stop Pin	211-21012

RECESSING SWING TOOLS AND BACK RESTS

No. 220 Recessing Swing Tools

The eccentric bushings make possible concentric grinding of the recessing tools, and they can then be rotated for right or left-hand recessing. Tools have a positive stop which accurately controls the turned diameter and are equipped with a guide block on the swinging arm for rigidity.

When the tool has been advanced into the work and is in a position ready to cut, the arm carrying the cutting tool is actuated by a fixed or an adjustable guide mounted on the cross slide (see page 90). Each tool comes with two eccentric bushings (see page 89).

Shank Dia.	Tool Moves from Center	Tool No.
5/8"	1/8"	**711-220-200**
3/4"	1/8"	**711-220-220**
1"	1/8"	**711-220-222**

For Recessing Swing Tool Blades, see page 96.

No. 230 Back Rests for Swing Tools and Slide Tools

Furnished with Carbide Back Rests

Back rests are held in the shanks of external swing tools, knurling swing tools and slide tools to support the workpiece during the operation. Back rests have "V" on both ends to provide full capacity with a single set of rests.

Shank Dia.	Capacity Diameter	Tool No.
7/16"	5/16"	**711-230-100**

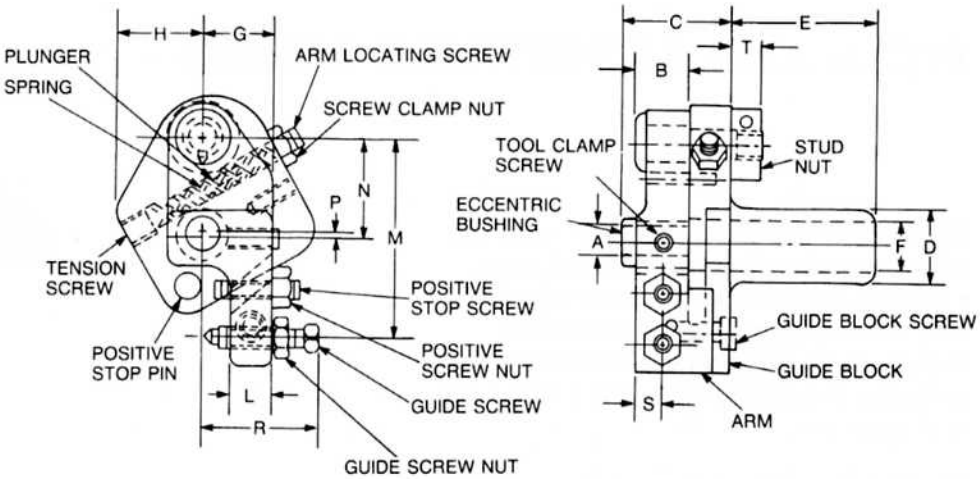

No. 220 Recessing Swing Tools

Tool No.	A	B	C	D	E	F	G	H	L	M	N	P	R	S	T
711-220-200	1/4	7/16	15/16	5/8	1-1/4	7/16	5/8	3/4	3/8	1-3/4	7/8	.008-.020	3/4	7/32	1/4
711-220-220	3/8	21/32	1-5/16	3/4	2	1/2	7/8	27/32	7/16	2-1/2	1-5/16	.012-.026	1-1/16	1/4	5/16
711-220-222	1/2	3/4	1-3/4	1	2-1/2	11/16	1	1-1/4	5/8	2-9/16	1-11/32	.015-.035	1-3/16	5/16	3/8

Tool No.	711-220-200	711-220-220	711-220-222
Arm	211-22002-3	211-22003-3	211-22004-2
Eccentric Bushing	211-22011 (.008)	211-22015 (.012)	211-22012 (.015)
Eccentric Bushing	211-22010 (.020)	211-22016 (.026)	211-22013 (.035)
Tool Clamp Screw	92-5390-620	92-5390-824	92-5390-824
Guide Block	211-22009	NONE	211-22014
Guide Block Screw	92-5050-616	NONE	92-5050-820
Guide Screw	92-5191-624	92-5191-828	92-5191-832
Guide Screw Nut	92-6010-611	92-6015-810	92-6015-810
Stud	211-21009-1	211-21010-1	211-21011-1
Pin	92-900-304	92-900-406	92-900-508
Stud Nut	472-153	472-279	472-156
Arm Locating Screw	92-5390-620	92-5390-820	92-5391-820
Screw Clamp Nut	92-6010-611	92-6015-810	92-6015-810
Positive Stop Screw	92-5390-624	92-5391-832	92-5191-832
Positive Stop Scr. Nut	92-6010-611	92-6015-810	92-6015-810
Tension Screw	92-5071-808	92-5071-1008	92-5071-1612
Positive Stop Pin	211-21512	211-22007-1	NONE
Spring	92-1000-632-20	92-1000-836-19	92-1000-1240-16
Arm Locating Pin	92-902-820	92-900-428	92-900-832
Plunger	211-21012	211-21013	211-21014
Shank	211-21501	211-21001-2	211-22001-1

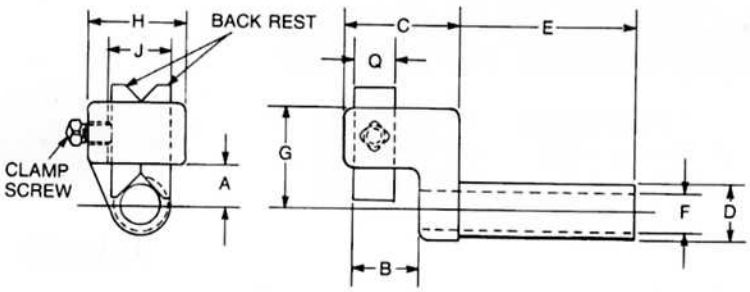

No. 230 Back Rests for Swing Tools and Slide Tools

Tool No.	A	B	C	D	E	F	G	H	J	Q
711-230-100	3/16	3/8	3/4	7/16	1 7/16	1/4	11/16	3/4	15/32	5/16

Tool No.	711-230-100
Carbide Back Rest	211-93018-1
Clamp Screw	92-5012-810
Body	211-23001-3

FIXED AND ADJUSTABLE GUIDES

Right-hand Fixed Guides are held under the front tool post in place of the raising block, while Left-hand Guides are attached to the side of the tool post. Guides control the motion of various swing tool arms and are used also to actuate angular cutting-off tools and slide tools.

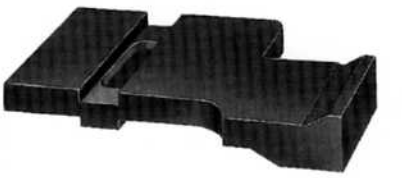

711-240-

The Right-hand Guide is used when the forming tool in the front tool post is set to cut with the spindle running forward. The Left-hand Guide is used when the forming tool in the front tool post is set to cut with the spindle running backward.

711-241-

NO. 240 FIXED GUIDES - Right-Hand

Machines Where Used	Tool No.
00 & 00G Auto.	**711-240-100**
0 & 0G Auto.	**711-240-120**
2 & 2G Auto. & 3	**711-240-122**

NO. 241 FIXED GUIDES - Left-Hand

Machines Where Used	Tool No.
00 & 00G Auto	**711-241-100**
0 & 0G Auto.	**711-241-120**
2 & 2G Auto.	**711-241-122**

Adjustable Guides

Adjustable guides are mounted in the same way as fixed guides. They are used whenever there is longitudinal movement of the turret in the operation.

711-245-

NO. 245 ADJ. GUIDES - Right-Hand Guide Swings Through 30° Angle

Machine Where Used	Tool No.
00 & 00G Auto.	**711-245-100**
0 & 0G Auto.	**711-245-120**
2 & 2G Auto. & 3	**711-245-122**

NO. 246 ADJ. GUIDES - Left-Hand Guide Swings Through 30° Angle (Except for 246-100 - 18°)

Machine Where Used	Tool No.
00 & 00G Auto.	**711-246-100**
2 & 2G Auto.	**711-246-122**
2 Auto. & 3	**711-246-222**

711-246-

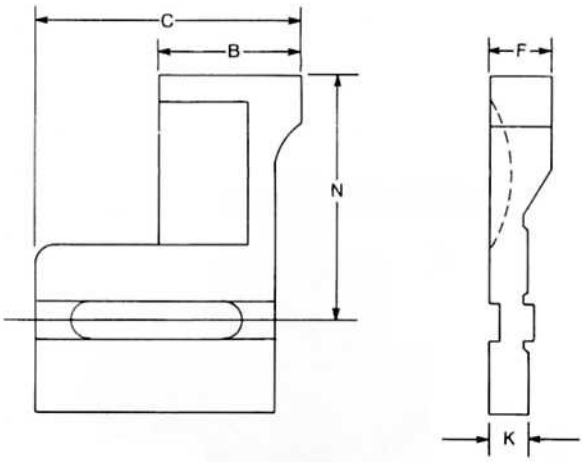

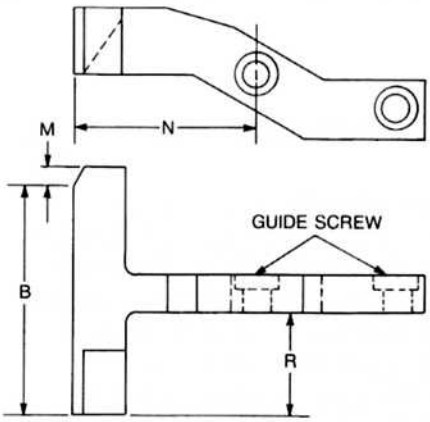

No. 240 — Right-Hand

Tool No.	Inches B	C	D*	F	K	N
711-240-100	1-3/8	2-1/8	1/16	3/8	1/4	2-1/8
711-240-120	1-3/4	3	1/16	5/8	5/16	2-13/16
711-240-122	2	3-3/4	1/8	7/8	1/2	3-1/2

No. 241 — Left-Hand

Tool No.	Inches B	D*	M	N	R
711-241-100	2-1/8	9/32	1/8	1-1/32	13/16
711-241-120	2-1/4	5/32	1/8	1-7/16	1-1/4
711-241-122	2-15/16	0	3/16	2- 3/8	1-3/8

***D (not shown in illustrations) represents distance from face of guide to cutting edge of form tool.**

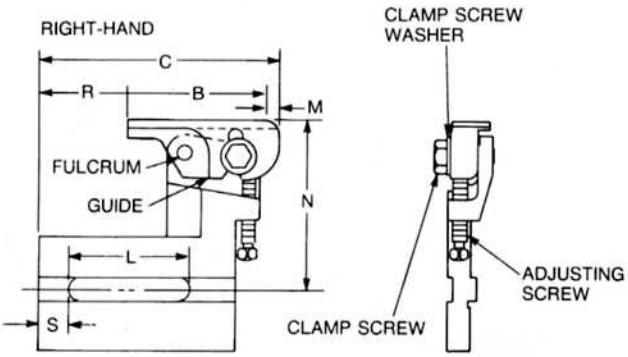

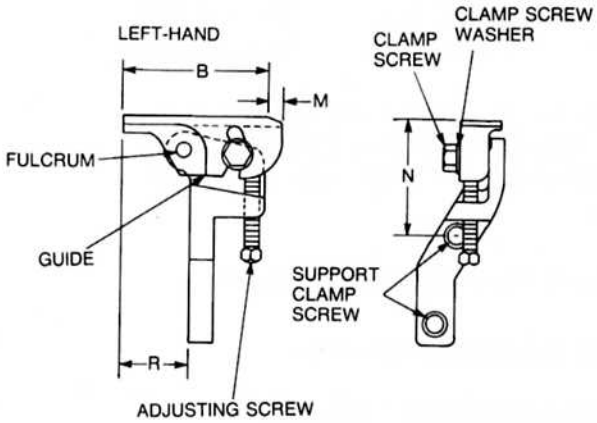

No. 245 — Right-Hand

Tool No.	Inches B	C	D*	L	M	N	R	S
711-245-100	1-11/16	2-9/16	7/32	1-5/16	1/16	1-31/32	13/16	1/4
711-245-120	2-3/8	3-13/16	0	1-7/8	3/16	2-7/8	1-1/4	1/2
711-245-122	3-5/8	5-5/8	0	2-9/16	1/8	3-5/8	1-7/8	11/16

No. 246 — Left-Hand

Tool No.	Inches B	D*	M	N	R
711-246-100	2	1/4	1/8	1-1/16	11/16
711-246-122	3-5/8	0	1/8	2-3/8	1-3/8
711-246-222	3-5/8	0	1/8	1-31/32	1-3/8

***D (not shown in illustrations) represents distance from face of guide to cutting edge of form tool.**

Tool No.	711-245-100	711-245-120	711-245-122	711-246-100	711-246-122	711-246-222
Guide	211-24508	211-24509-1	211-24510	211-24604-1	211-24510	211-24510
Adjusting Screw	211-24515	92-5010-836	92-5010-1040	92-5012-620	92-5010-1040	92-5010-1048
Clamp Screw	92-5200-816	92-5035-820	92-5035-1032	92-5200-820	92-5200-1032	92-5035-1032
Clamp Scr. Washer	NONE	92-2040-802-18	92-2040-1002-24	NONE	92-2040-1002-20	92-2040-1002-20
Fulcrum	92-900-812	92-900-818	92-900-1020	92-900-824	92-900-1020	92-900-1020
Body	211-24501-1	211-24502	211-24503	211-24601-1	211-24603-1	211-24609
Support Clamp Scr.	NONE	NONE	NONE	92-5050-816	92-5050-1232	92-5380-1024

NO. 225 RECESSING TOOLS

For Internal Chamfering

No. 225 Recessing Tools are used for internal chamfering and are actuated by the forward movement of the turret. When the adjustable tool stops contact the spindle box nut, the forward movement of the Tool Holder is stopped. Then, as the turret advances, the holder pivots to allow the recessing tool to cut.

These tools are used only for chamfering internally as they have no longitudinal movement. They can be used with the spindle running in either direction.

Shank Dia.	Machines Where Used	Tool No.
5/8"	00 & 00G Auto.	**711-225-100**
3/4"	0 & 0G Auto.	**711-225-120***
1"	2 & 2G Auto.	**711-225-122***

* For No. 2 machines, 3/4" capacity, use 711-225-120 with Turret Tool Adapter No. 711-260-222 or 711-261-222. (See page 100)

Tools for Recessing Tools

High Speed Steel Hardened

Recessing Tool Where Used	Tool No. Pkg. of 4
711-220-200	**711-94500**
711-225-100	**711-94501**
	711-94502
	711-94503
711-225-120	**711-94504**
	711-94505
	711-94506
711-220-220	**711-94507**
	711-94508
711-220-222	**711-94509**
711-225-122	**711-94510**
	711-94511

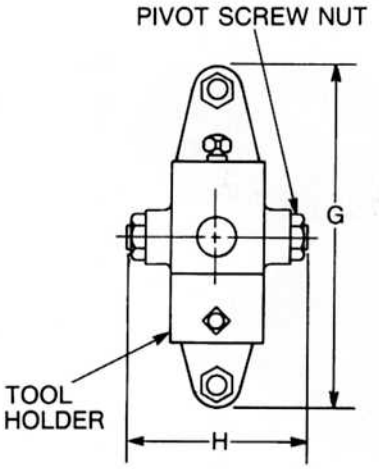

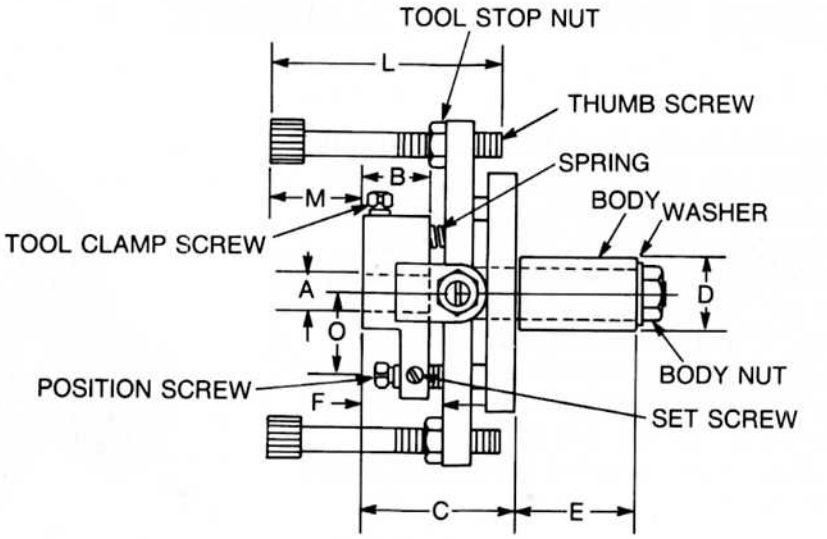

Tool No.	Max. Shank Advance	Max.Tool Swing	A	B	C	D	E	F	G	H	L	M	O
			Inches										
711-225-100	3/32	8°	1/4	1/2	1-11/32	5/8	1	25/32	2-5/8	1-11/16	1-7/8	11/16	5/8
711-225-120	1/8	8°	5/16	5/8	1-19/32	3/4	1-1/2	15/16	3-5/8	1-13/16	2-5/16	1	7/8
711-225-122	5/32	8°	1/2	7/8	2	1	1-5/8	1-1/4	4-5/8	2-3/8	3-1/16	1-1/4	1-1/8

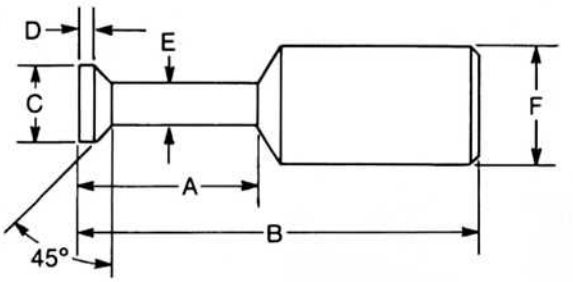

Tool No.	711-225-100	711-225-120	711-225-122
Tool Holder	211-22507	211-22508	211-22509
Brass Shoe	92-5930-504	92-5930-604	92-5930-604
Spring	92-1000-824-20	92-1000-1024-19	92-1000-1236-18
Tool Clamp Screw	92-5012-616	92-5010-824	92-5010-1032
Position Screw	92-5012-616	92-5010-816	92-5010-1020
Tool Stop	92-5120-840	211-22514	472-836
Tool Stop Nut	92-6015-814	92-6015-814	92-6015-1017
Pivot Screw	211-22517	211-22517	91-537-11
Pivot Screw Nut	92-6015-810	92-6015-810	92-6015-1012
Body Washer	92-2040-802-16	92-2040-802-20	92-2040-1204-28
Body Nut	92-6015-810	92-6015-810	92-6015-1214
Set Screw	92-5071-605	92-5071-808	92-5071-812
Shank	211-22501-2	211-22502	211-22503
Body	211-22504-2	211-22505-2	211-22506-2

TOOLS for RECESSING TOOLS - High Speed Steel Hardened

Tool No.	A	B	C	D	E	F
	Inches					
711-94500	5/16	7/8	.140	.030	.080	1/4
711-94501	7/16	1	.190	.030	.110	1/4
711-94502	9/16	1-1/8	.240	.030	.150	1/4
711-94503	1/2	1-1/4	.220	.040	.150	5/16
711-94504	5/8	1-3/8	.260	.040	.180	5/16
711-94505	3/4	1-1/2	.300	.040	.210	5/16
711-94506	9/16	1-1/2	.240	.045	.180	3/8
711-94507	11/16	1-5/8	.300	.045	.330	3/8
711-94508	13/16	1-3/4	.360	.045	.250	3/8
711-94509	5/8	1-7/8	.270	.050	.200	1/2
711-94510	3/4	2	.330	.050	.250	1/2
711-94511	1	2-1/4	.400	.050	.300	1/2

Note: For large holders, use standard Woodruff Keyseat Cutters.

BACK RESTS FOR TURRETS

No. 234 Roller Back Rests for Turrets

These tools are held in the turret to support the work and prevent it from springing under cross slide operations. The tools are provided with rollers to eliminate the possibility of rub marks and scoring that can occur with the "V" type of back rest. Rolls and roll holders are the same as used on Nos. 51 and 52 Roller Back Box Tools, thereby reducing your inventory of spare parts. A clamp screw is provided for holding a stop in the shank.

Shank	Capacity		
Dia.	Length	Diameter	Tool No.
5/8"	*	3/32" to 11/32"	**711-234-100**
	1-1/8"	11/32" to 1/2"	
3/4"	*	3/16" to 7/16"	**711-234-120**
	1-1/2"	7/16" to 3/4"	
1"	*	1/4" to 5/8"	**711-234-122**
	1-23/32	"5/8" to 1"	

*Turned diameter will pass through shank bore.
For Roll and Rod Holders, see page 38.

No. 235 'V' Back Rests for Turrets

Turret back rests, held in the turret, support the stock being turned and prevent it from springing under cross slide operations. Shanks are arranged to hold stock stop or end cutting tools.

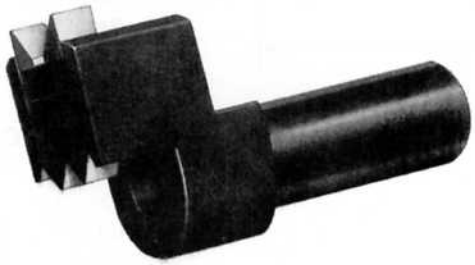

Back rests have a "V" on both ends to provide full capacity with a single set of rests.

Shank Dia.	Capacity Diameter	Tool No.
5/8"	1/2"	**711-235-100**
3/4"	5/8"	**711-235-120**
1"	1-1/8"	**711-235-122**

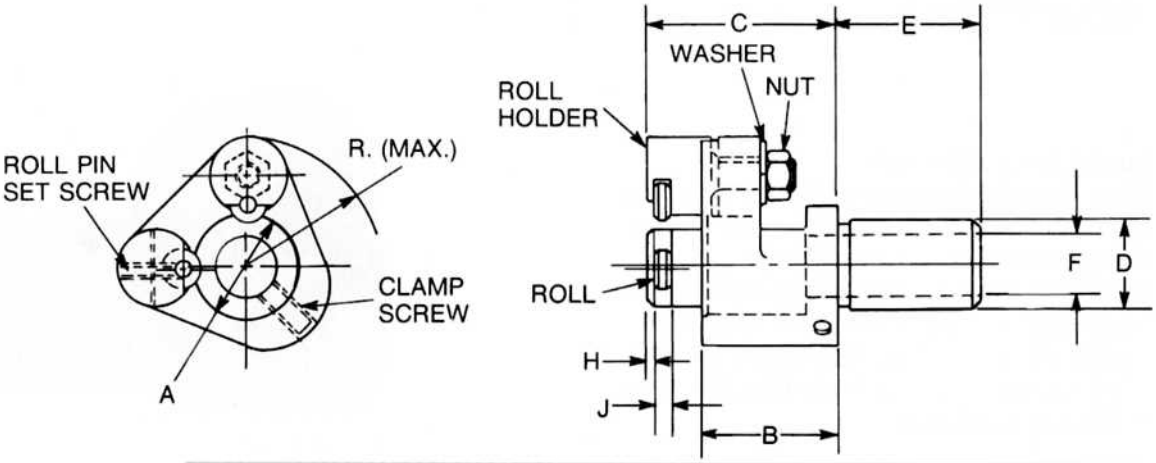

Tool No.	Inches A	B	C	D	E	F	H	J	R
711-234-100	9/16	1-1/8	1-19/32	5/8	1-1/8	3/8	1/16	5/32	31/32
711-234-120	13/16	1-1/2	2-1/8	3/4	1-3/8	1/2	1/16	3/16	1-13/32
711-234-122	1-1/8	1-9/16	2-3/16	1	1-5/8	11/16	1/16	3/16	1-17/32

Tool No.	711-234-100	711-234-120	711-234-122
Roll Holder	211-5131-1	211-5109-1	211-5109-1
Washer	92-2040-802-18	92-2040-1002-24	92-2040-1002-24
Nut	92-6015-814	92-6015-1017	92-6015-1017
Roll Pin	211-5126	211-5127	211-5127
Roll Pin Set Screw	92-5390-608	92-5390-620	92-5390-620
Roll	711-55-100	711-55-120	711-55-120
Clamp Screw	92-5390-612	92-5390-816	92-5390-816
Body	211-23401	211-23402	211-23403

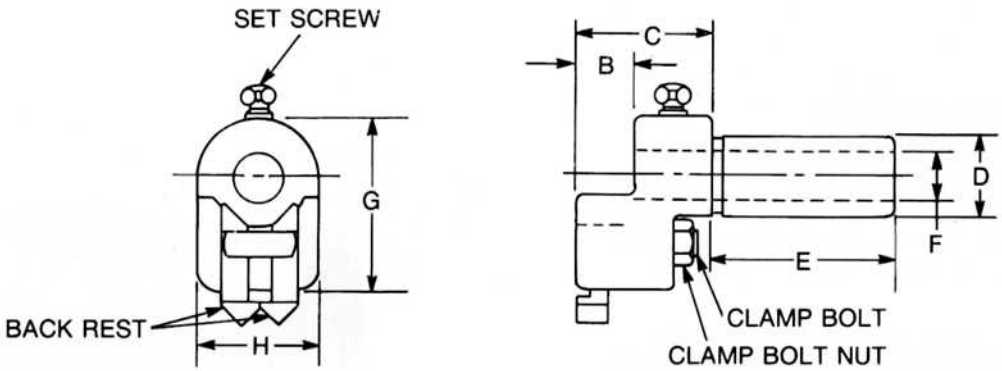

Tool No.	Inches B	C	D	E	F	G	H
711-235-100	1	1-1/2	5/8	1-1/8	5/16	1-1/4	7/8
711-235-120	7/8	1-5/8	3/4	1-3/4	3/8	1-9/16	7/8
711-235-122	3/4	1-3/4	1	2-3/8	5/8	2-3/16	1-1/2

Tool No.	711-235-100	711-235-120	711-235-122
Back Rest (Pair)	211-23507	211-23508	211-23509
Set Screw	92-5012-812	92-5012-1012	92-5012-1220
Clamp Bolt	211-23512	211-23520	211-23519
Clamp Bolt Nut	92-6015-814	92-6015-814	92-6015-1017
Body	211-23501	211-23503	211-23504

ADAPTERS

Turret Tool Adapters

Turret Tool Adapters permit the use of screw machine tools in larger machines than those for which the tools are designed. This is an advantage when working on small diameters or on long pieces where interferences may be a problem. Adapters also permit the use of infrequently used tools between machines of different capacities.

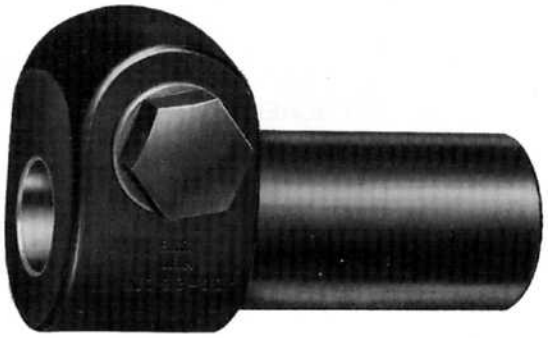

The No. 260 Adapters extend beyond the turret which allows the use of small tools close to the collet.

Turret Hole	Tool Shank Diameter	Tool No.
3/4"	5/8"	**711-260-120**
1"	5/8"	**711-260-122**
1"	3/4"	**711-260-222**
1-1/4"	1"	**712-260-1125**
1-1/2"	1"	**712-260-1150**
1-3/4"	1"	**712-260-1175**

Split Bushing Adapters

With a Split Bushing Adapter holding a smaller toolholder in the turret of a machine of larger capacity, the toolholder is held flush with the turret. This allows for full use of the turning length of the machine.

Turret Hole	Tool Shank Diameter	Length	Tool No.
3/4"	5/8"	1-7/16"	**711-261-120**
1"	5/8"	1-11/16"	**711-261-122**
1"	3/4"	1-11/16"	**711-261-222**
1-1/4"	1"	1-3/4"	**711-261-123**

Order quality Tool Holders, Collets and Feeding Fingers from the B & S authorized stocking distributor in your area.

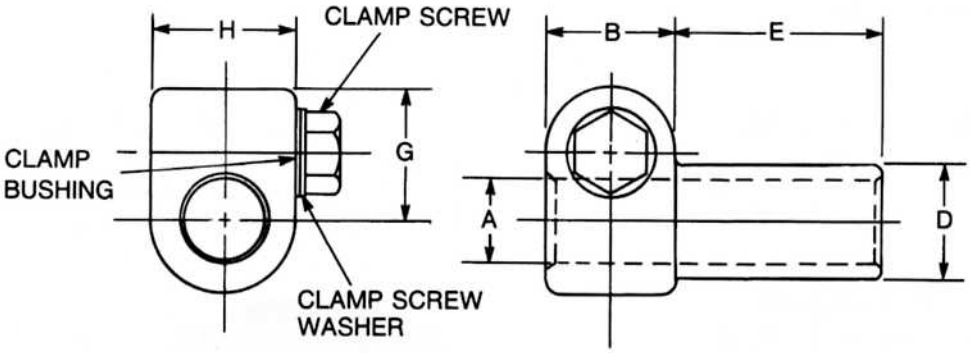

Tool No.	Inch					
	A	B	D	E	G	H
711-260-120	5/8	1-1/8	3/4	1-1/2	1-1/8	1
711-260-122	5/8	1-1/8	1	1-7/8	1-1/8	1-1/4
711-260-222	3/4	1-1/8	1	1-7/8	1-1/8	1-1/4
712-260-1125†	1	2-1/8	1-1/4	3-1/16	1-3/16	2
712-260-1150†	1	2-1/8	1-1/2	3-1/16	1-3/16	2
712-260-1175†	1	2-1/8	1-3/4	3-1/16	1-3/16	2

† Have flat on shank.

Tool No.	711-260-120	711-260-122	711-260-222	712-260-1125	712-260-1150	712-260-1175
Body	211-26001-1	211-26002-1	211-26003-1	212-26001	212-26002	212-26003
Clamp Washer	92-2040-1202-24	92-2040-1202-24	92-2040-1202-24	92-2040-1602-32	92-2040-1602-32	92-2040-1602-32
Clamp Bushing	211-26005-1	211-26005-1	211-26006-1	NONE	NONE	NONE
Clamp Screw	211-26008	211-26008	211-26008	NONE	NONE	NONE
Set Screw	NONE	NONE	NONE	92-5390-1616	92-5390-1616	92-5390-1616
Clamp Nut	NONE	NONE	NONE	92-6015-1620	92-6015-1620	92-6015-1620
Clamp	NONE	NONE	NONE	212-26004	212-26004	212-26004
Retainer	NONE	NONE	NONE	429-158	429-158	429-158

COMBINATION ROUGHING AND FINISHING ADJUSTABLE HOLLOW MILLS

Greatest Capacities - Easy, Accurate Setting

The new Combination Roughing and Finishing Adjustable Hollow Mills offer the greatest size range of any tool in this class. Further advantages include a design which permits one set of blades and back rests to cover the complete range of each tool and an adjusting screw on one blade that provides easier and more accurate settings.

Blades are hardened and with the back rests have individual radial adjustment. Four blades and two back rests are furnished with each mill. Four blades are used for roughing and two blades and two back rests for finishing.

Shank	Capacity		
Dia.	Min.	Max.	Tool No.
5/8"	.03"	1/2"	**711-27-200**
3/4"	3/16"	1/2"	**711-27-120**
1"	1/4"	1"	**711-27-122**
1-1/4"	1/4"	3/4"	**712-25-1125**

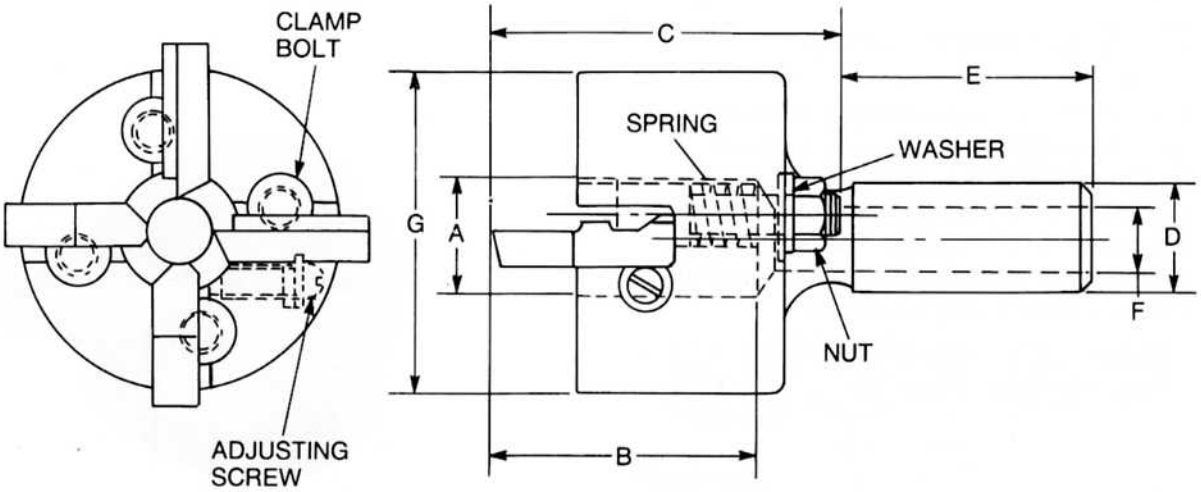

	Inches						
Tool No.	**A**	**B**	**C**	**D**	**E**	**F**	**G**
711-27-200	**5/8**	**1-3/32**	**1-1/2**	**5/8**	**1-1/16**	**3/8**	**1-3/4**
711-27-120	**5/8**	**2-1/4**	**2-9/16**	**3/4**	**1-15/16**	**7/16**	**2-1/4**
711-27-122	**1-1/8**	**2-9/16**	**3-11/32**	**1**	**2-7/16**	**5/8**	**3**
712-25-1125	**13/16**	**2-5/8**	**3-1/4**	**1-1/4**	**3-1/4**	**3/4**	**3**

Tool No.	**712-25-1125**	**711-27-200**	**711-27-120**	**711-27-122**
Body	212-2501	211-2701-1	211-2707	212-2704-1
Clamp Washer	92-2040-1202-24	NONE	NONE	92-2040-1202-24
Clamp Bolt	212-2502	211-2702	211-2708	211-2705
Clamp Nut	92-6015-1214	92-6015-810	92-6015-1017	92-6015-1221
Spring	NONE	NONE	92-1000-1620-17	92-1000-2032-19
Adjusting Screw	NONE	211-2703-1	211-2703-1	211-2706-2
Blades	711-35-112	711-37-200	711-37-120	711-37-122
Back Rest	NONE	711-42-200	711-42-120	711-42-122

High Speed Steel Blades

For Mill No.	**Tool No. Set of 4**
25-1125 & 25-115	**711-35-112**
27-200	**711-37-200**
27-120	**711-37-120**
27-122	**711-37-122**
00*	**711-3000-100**

* Discontinued Hollow Mill

Back Rests

Set of 2 Back Rests for Mill No.	**Tool No. per set**
27-200	**711-42-200**
27-120	**711-42-120**
27-122	**711-42-122**

NO. 373 BURNISHING TOOLS

For Super-fine Finishes

Burnishing Tools are used on turned surfaces to produce finishes smoother than those which can be turned. This is accomplished by the three adjustable rolls which are mounted in the holder. The design of the burnishing tools makes the positioning of the rolls on the work simple and fast.

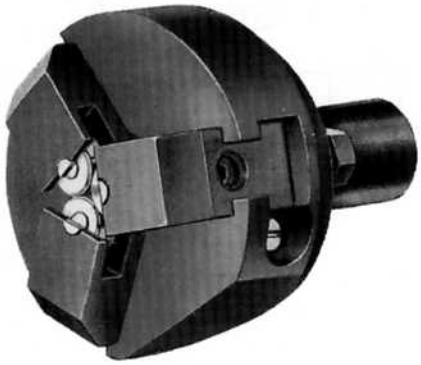

Shank Dia.	Length	Capacity Diameter	Tool No.
5/8"	*	1/16" to 5/16"	**711-373-100**
	1"	5/16" to 1/2"	
3/4"	*	1/8" to 3/8"	**711-373-120**
	1-1/2"	3/8" to 3/4"	
1"	*	3/16" to 9/16"	**711-373-122**
	2"	9/16" to 1-1/4"	

* Turned diameter will pass through shank bore.

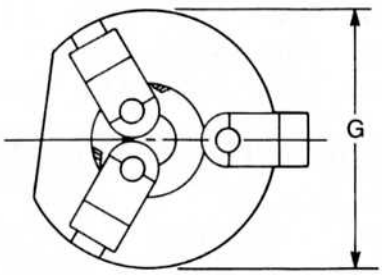

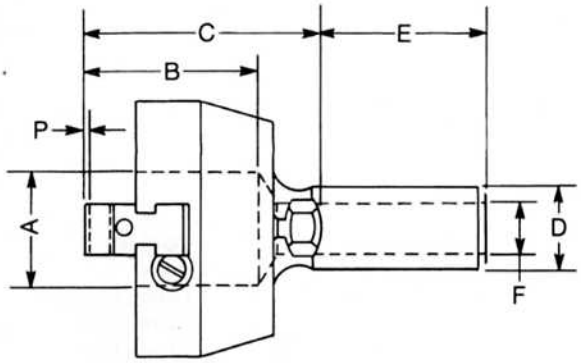

Tool No.	A	B	C	D	E	F	G	P
711-373-100	**5/8**	**1-3/32**	**1-7/16**	**5/8**	**1-1/8**	**3/8**	**2**	**1/16**
711-373-120	**13/16**	**1-5/8**	**2-5/16**	**3/4**	**1-5/8**	**7/16**	**2-1/4**	**1/16**
711-373-122	**1-3/8**	**2-1/8**	**2-13/16**	**1**	**2-1/16**	**5/8**	**3-1/8**	**3/32**

Tool No.	711-373-100	711-373-120	711-373-122
Roll Holder Comp.	211-37302	211-37309	211-37305
Roll	711-55-100	711-55-122	711-55-122
Roll Stud	211-5126	211-5127	211-5125
Screw	92-5390-612	92-5390-620	92-5390-620
Adjusting Screw	211-2703-1	211-37308-1	211-2706-2
Clamp Screw	211-37303	92-5010-1032	92-5041-1236
Body	211-37301	211-37306	211-37304

Rolls for Burnishing Tools

Tool No.	O.D.	Width	Hole	Where Used
711-55-100*	5/16	5/32	1 /8	711-373-100
711-55-121*	1/2	1/4	3/16	711-373-120
711-55-122*	5/8	1/4	1/4	711-373-122

* Package of 6 rolls.

REVOLVING STOCK STOPS

711-236-400

711-236-300

Miniature Revolving Stock Stop
This slim revolving stock stop saves cross slide tool clearing time, and is ideal for small, delicate jobs. It features screw adjustment for length so that you can accurately control the length of the cut-off piece. Construction permits easy substitution of special stock stops.

Standard Size Adjustable Revolving Stops
These stops provide definite advantages in screw machine operation. The face, with a large diameter for large stock, revolves freely against an antifriction thrust bearing. The face of the stop can be adjusted from the turret. A locknut positively locks the adjustment for long runs with precision uniformity in part lengths.

Shank Dia.	Tool No.
5/8"	**711-236-300**
3/4"	**711-236-320**
1"	**711-236-322**
1"	**711-236-522**
5/8"	**711-236-400***

* Miniature

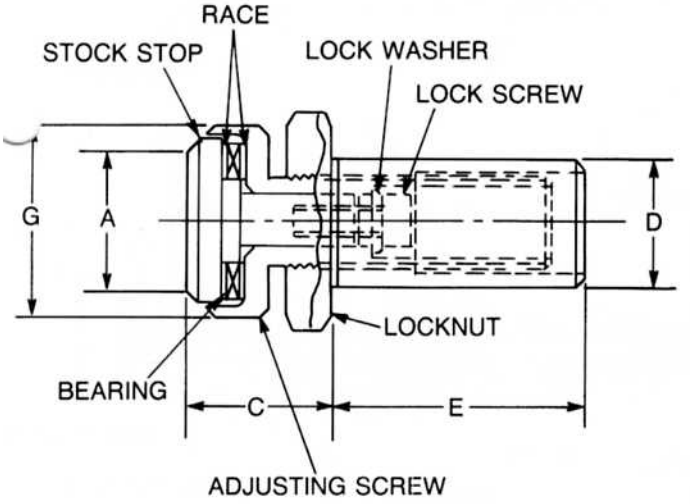

	Inches					
Tool No.	**A***	**C Max.**	**C Min.**	**D**	**E**	**G**
711-236-300	**23/32**	**1-5/16**	**5/8**	**5/8**	**1-3/16**	**15/16**
711-236-320	**7/8**	**1-3/4**	**13/16**	**3/4**	**1-1/2**	**1-1/8**
711-236-322	**1-5/16**	**2-1/8**	**7/8**	**1**	**1-7/8**	**1-5/8**
711-236-522	**2-1/16**	**2-5/16**	**1-1/16**	**1**	**1-7/8**	**1-5/8**
157-236-522-11	**1.50**	**4.00**	**2.88**	**1**	**1.89**	**1.66**
711-236-400	**3/16**	**1-7/8**	**1-1/16**	**5/8**	**1-1/8**	**7/8**

*** Dimension A is diameter of flat surface on stop.**

Tool No.	**711-236-300**	**711-236-320**	**711-236-322**	**711-236-522**	**711-236-400**
Stock Stop Body	211-23602-3	211-23604-3	211-23606-2	211-23606-2	211-23602-3
Stock Stop	211-23609-5	211-23610-5	211-23611-5	211-23630-1	211-23626
Stock Stop Adj Scr.	211-23615-2	211-23619-2	211-23622-2	211-23622-2	211-23625
Adj. Scr. Nut	211-23618	211-23621	211-23623	211-23623	211-23618
Needle Thrust Brg.	438-41	438-10	438-4	438-4	NONE
Bearing Race	438-42	438-43	438-33	438-33	NONE
Washer	211-23633	92-2040-602-12	92-2040-802-16	92-2040-802-16	NONE
Lock Screw	472-1039	472-270	92-5380-816	92-5380-816	NONE
Ball	NONE	NONE	NONE	NONE	429-1293
O-Ring	NONE	NONE	NONE	NONE	466-619
Retaining Pin	NONE	NONE	NONE	NONE	92-900-204
Bearing Shoe	NONE	NONE	NONE	NONE	211-23627
Set Screw	NONE	NONE	NONE	NONE	472-238

STOCK STOPS FOR SPRING COLLETS

These stock stops, for second operation work, reduce tool inventories and eliminate the need for special collets having threaded ends, pins, or screws to hold the stop in place. An ingenious design makes insertion of the stop in the collet simple and fast.

Note: B+S Screw does not recommend hand loading at the workplace.

Adjustable Solid Stock Stop No. 371
This stop offers simplified application for second operation work on Automatic, Wire Feed and Hand Screw Machines, and is adjustable to the length of work to be chucked.

Adjustable Spring Ejector Stop No. 372
The two adjusting locknuts on the end of the spring plunger are adjustable to control automatic ejection of work pieces of varying lengths.

SPRING EJECTOR STOP

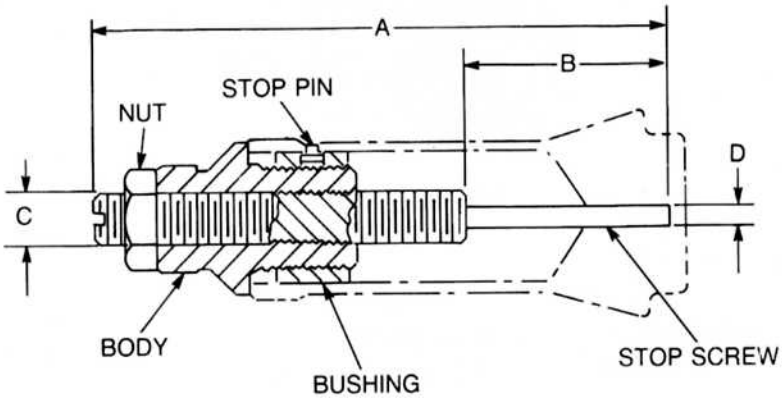

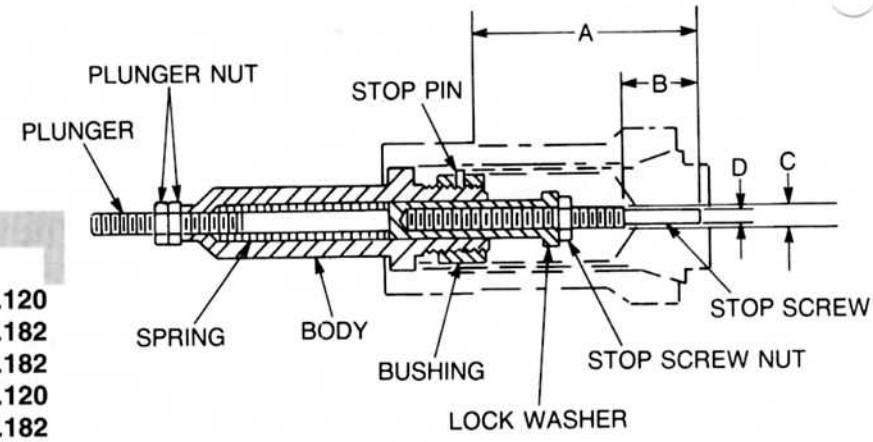

For Use With Spring Collet No.	Tool No.
No. 371 Adjustable Solid Stock Stops	
10	711-371-110
21	711-371-121
22	711-371-122
No. 372 Adjustable Spring Ejector Stops	
10	711-372-110
11	711-372-111
22	711-372-122

	Inches			
Tool No.	A	B	C	D
711-371-110	3-1/4	1	1/4-20	.123/.120
711-371-121	3-3/4	1-1/4	3/8-16	.185/.182
711-371-122	5-5/8	2	1/2-13	.185/.182
711-372-110	1-5/8	11/16	1/4-20	.123/.120
711-372-111	2	3/4	1/4-20	.185/.182
711-372-122	3-1/8	1-1/8	5/16-18	.185/.182

Tool No.	711-371-110	711-371-121	711-371-122	711-372-110	711-372-111	711-372-122
Body	211-37102	211-37113	211-37110	211-37203-1	211-37206	211-37209
Bushing	211-37103	211-37114	211-37111	211-37103	211-37107	211-37111
Stop Screw	211-37101	211-37105	211-37109	211-37201-1	211-37204	211-37207
Nut	92-6015-814	92-6015-1214	92-6015-1620	92-6015-810	92-6015-810	92-6015-1012
Stop Pin	211-37104	211-37115	211-37108	211-37104	211-37108	211-37108
Plunger	NONE	NONE	NONE	211-37205	211-37205	211-37208
Spring	NONE	NONE	NONE	211-37214	211-37214	211-37215
Plunger Nut	NONE	NONE	NONE	92-6015-810	92-6015-810	92-6015-1012
Lockwasher	NONE	NONE	NONE	92-2030-8	92-2030-8	92-2030-10

STOCK STOPS FOR TURRETS

The stops are tapered on one end and are hardened.

Inches Dia. & Length	Tool No.
5/8 X 1-3/4	**711-238-100**
5/8 X 2	**711-238-200**
5/8 X 2-1/2	**711-238-400**
3/4 X 2-1/4	**711-238-120**
3/4 X 2-3/4	**711-238-320**
3/4 X 3	**711-238-420**
3/4 X 3-1/4	**711-238-520**
1 X 3-5/8	**711-238-422**

SPINDLE BRAKES

Spindle brakes are used to stop the machine spindle quickly and hold it stationary for such operations as drilling from the cross slides with cross drilling attachments, or milling from the cross slide or turret by means of special attachments.

Brakes for spline shafts fit over the spline shaft at the base of the machine where they hold stationary the upper shaft sprocket for low speed spindle drive. This holds spindle stationary when clutch engages the low speed sprocket.

Machines Where Used		Tool No.
00G Auto.	19799 to 22023 incl. Comm. 542-00-1	
0G Auto.	14343 to 15417 incl. Comm. 542-0-1	**711-250-622**
2G Auto.	8778 to 8783 incl. 9084 to 14813 incl. Comm. 542-2-1	
00 Auto. 2 Auto. 2 & 3 4 Auto.	(Comm. 542-00-3300) (Comm. 542-2-3100) Ultramatic (Comm. 542-4-1)	**711-250-124**

Tool No.	711-250-622	711-250-124
Bolt	92-5041-1024	92-5041-1032
Nut	92-6015-1012	92-6015-1012

CROSS SLIDE TOOL CENTERING GAGE

Setting the cutting edges of cross slide mounted tools on the centerline of the machine spindle is greatly facilitated by this gage which consists of a movable gage rod in a fixed arm attached to a magnetic base.

In use, the magnetic base is secured to the top of the turret slide way and the cutting edges of the cross slide tools are brought level with the top surface of the gage rod.

The gage is of particular advantage when setting cross slide tools that do not cut to the center of the work. Thread chasing and longitudinal turning tools are in this category. Also, this gage permits replacing circular form tools on center after sharpening without changing the size setting.

Machines Where Used	Tool No.
00 Auto	**711-8-100**
2 Auto	**711-8-122**

Tool No.	711-8-100	711-8-122
Magnetic Base	479-710-1	211-80001
Center Gage Rod	211-80005	211-80002
Gage Arm Plate	211-80006	211-80003
Center Gage Arm	211-80007	211-80004
Thumb Screw	88-5125-816	479-548
Thumb Screw	88-5128-616	92-5120-616
Socket Screw	92-5380-824	92-5380-616
Socket Screw	NONE	479-419
Shoulder Bushing	472-1105	NONE

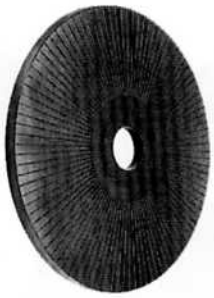

Pre-colored, ready for scribing

Cam Blanks are for use on automatic screw machines and are furnished for lead, cross slide and vertical slide attachment cams. They are made from mild steel and are provided with a locating hole and are bored, turned and graduated into 100 sectors. These divisions are for convenience in laying out the cam to be cut. Shaft holes are a few thousandths undersize to allow for growth to correct fit after hardening. Cam blanks for No. 4 Machine are provided with the necessary holes but are not graduated.

Machines Where Used	Dia.	Hole Dia.	Tool No.
Lead Cam Blanks			
00 & 00G Auto.			
Auto. Cutting-Off (Opposed Sp. Type)	4-1/2"	1"	**711-350-100**
Auto. Screw Threader			
2G Auto.	7"	1-1/4"	**711-350-122**
00 & 00G Auto.			
Auto. Cutting-Off (Opposed Sp. Type)	5"	1"	**711-355-100**
Auto. Screw Thd'g			
00 Auto. (Commencing 542-00-3300)	5-1/2"	1"	**711-355-300**
0 & 0G Auto.	6-1/2"	1-1/8"	**711-355-120**
0 & 0G Auto.	7"	1-1/8"	**711-355-220**
2 & 2G Auto.	8"	1-1/4"	**711-355-122**
2 & 2G Auto. & Auto. Pinion Tg.	9"	1-1/4"	**711-355-222**
2 Auto. (Commencing 542-2-3100) and			
2 & 3 Ultramatic	10"	1-1/4"	**711-355-322**
Rapid Pull-Out Cam Blank			
00 & 2 (Commencing 542-2-5601) and	4-1/2"	1"	**711-350-100**
2 & 3 Ultramatic	4-1/2"	1-1/4"	**711-356-122**
Cross Slide Cam Blanks			
00 & 00G Auto.			
Auto. Cutting-Off (Opposed Sp. Type)	4-1/2"	1"	**711-350-100**
Auto. Screw Thd'g			
0 & 0G Auto.	6"	1-1/8"	**711-350-120**
2 & 2G Auto. and 2 & 3 Ultramatic	7"	1-1/4"	**711-350-122**
Vertical Slide Cam Blanks			
00 & 00G Auto.	4-1/2"	1"	**711-350-100**
0 & 0G Auto.	6"	1-1/8"	**711-350-120**
2 & 2G Auto. (Commencing 7352)	7"	1-1/4"	**711-350-122**
2 & 2G Auto. (Prior to 7352)	6"	1-1/4"	**711-360-122**
4 Auto (Commencing 542-4-1)	8-1/2"	2-1/2"	**711-360-124**
No. 2 with 4th Slide**	8"	1-1/4"	**711-360-222**

All Cam Blanks are pre-colored for immediate scribing except those for No. 4 Machines.
711-360-222 Cam is slotted.
** 2 & 3 Ultramatic use either
For cam heat treating instructions, see page A-5

ADJUSTABLE CAM HOLDERS

Use "Pick-up" Cams!

Adjustable Cam Holders take the place of regular cam holders on cross slide cam shafts. They permit you to rotate the cams in relation to each other or relative to the lead cam. The ability to adjust cams permits the use of one set of cross slide cams with different lead cam for a number of similar jobs. The adjustable holders also provide an easy means for duplicating setups.

On the new Nos. 00 & 2 machines, thick cam holders are used on the front slide; thin holders on the back. On earlier machines, thin holders are used on the front slide; thick holders on the back.

Machines Where Used	Cross Slide	Tool No.
00	Thin	**711-255-100**
00	Thick	**711-256-100**
0	Thin	**711-255-120**
0	Thick	**711-256-120**
2 & 3	Thin	**711-255-222**
2 & 3	Thick	**711-256-222**
4	Front or Back	**711-257-124**

Tool No.	711-255-100	711-256-100	711-255-120	711-256-120	711-255-222	711-256-222	711-257-124
Cam Holder	42-6562-1	42-16610-1	42-6575-1	42-6573-2	42-6571-1	42-6569-1	42-14991-1
Key	92-971-832	92-970-818*	92-971-820	92-970-816	91-97-434	92-970-1026	91-97-517
Screw	NONE	92-5081-420	NONE	92-5081-424	92-5081-424	92-5081-624	92-5081-632
Driving Disk	42-6563-1	42-6563-1	42-6576-1	42-6576-1	42-6572-1	42-6572-1	42-14992
Pin	91-91-264	91-91-264	91-94-12-1	91-94-12-1	91-94-12-1	91-94-12-1	NONE

* Use Key 92-971-832 for Holder without screws.

Order Quality Tool Holders, Collets and Feeding Fingers from the B & S authorized stocking distributor in your area.

B&S

CAM AND LEVER TEMPLATES

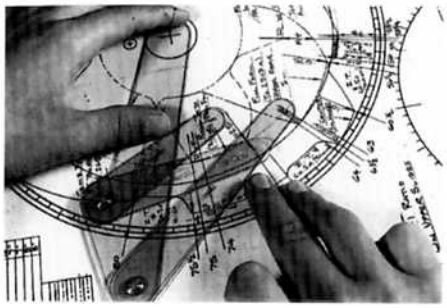

No. 365 Cam Templates
Cam Templates are used for laying out the rise and drop of cam lobes. They are transparent and the lines of the cam drawing are clearly visible through them. Each curve is marked with the range in seconds per piece for which it is intended.

No. 370 Lever Templates
Lever Templates are used for laying out cams where very close timing is required, as when the tool is operated by combined action of the cross slide and turret slide. They are transparent and the lines of the cam drawing are clearly visible through them.

NO. 370 LEVER TEMPLATES

Auto Screw Machine Where Used	Tool No.
Screw Threading No. 00G No. 00 Begin Ser. 542-00-3300 No. 0G No. 2G	**711-370-200**
No. 2 Begin Ser. 542-2-3100 and No. 3	**711-370-222**

NO. 365 CAM TEMPLATES

Auto Screw Machine Where Used

00G	00 Begin Ser. 542-00-3300	Screw Threading	2G	2 Begin Ser. 542-2-3100 and 3	Seconds to Make One Piece	Tool No.
All Cams	Cross Slide	All Cams			3 and over	**711-365-100**
All Cams	Cross Slide	All Cams			3/4 to 3	**711-365-200**
	Lead				3 and over	**711-365-400**
	Lead				3/4 to 2-3/4	**711-365-500**
			All Cams		6 and over	**711-365-122**
			All Cams		3 to 6	**711-365-222**
				Lead	1-2/3 to 5-1/2	**711-365-322**
				Lead	6 and over	**711-365-422**
				Cross Slide	1-2/3 and over	**711-365-522**
				4th Slide	6 and over	**711-365-622**

0G	4 Begin Ser. 542-4-2	Seconds to Make One Piece	Tool No.
All Cams		5 and over	**711-365-120**
	Cross Slide	12 to 800	**711-365-324**

See Publications, page 123 for cam layout sheets.

CHUCK NUTS

Collet Size	A	B	C	Tool No.
00	1-29/32	1.486-16	5/8	42-3750
10	2-1/8	1.741-16	21/32	42-7470
11B	2-27/32	2.363-14	15/16	42-14762-99
22	3-25/32	3.387-8	1-1/8	42-11557
22(#3)	4-3/4	4.250-10	1.100	42-21168
22C(#3)	4-3/4	4.250-10	1.100	42-21169
22D(#3)	4-3/4	4.250-10	1.100	42-20352
23AM(#3)	4-3/4	4.250-10	1.100	42-21237
23-23M(#3)	4-3/4	4.250-10	1.100	42-20267-99

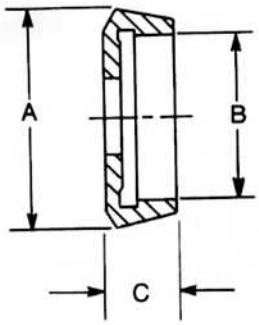

Collet Size	A	B	C	Tool No.
00	2-11/64	1-3/4-16	5/8	42-16851-99
00	2-11/64	1-3/4-16	3/4	42-11497-99
10	2-11/64	1-3/4-16	5/8	42-16435
10	2-11/64	1-3/4-16	23/32	42-11496-99
10	2-35/64	2-7/32-18	5/8	42-19680
11	2-63/64	2-3/8-14	1-1/16	42-11927
11C	3	2-3/8-18	15/16	42-17359
11C	2-35/64	2-7/32-18	5/8	42-19682-1
22	3-59/64	3-1/8-8	1-3/16	42-13194-99
22	3-59/64	3-3/8-8	1-3/16	42-13205-99
22	3-55/64	3-3/8-8	1-1/16	42-17576
22C	3-55/64	3-1/8-8	1-1/16	42-17439
22C	3-55/64	3-3/8-8	1-1/16	42-17578
22C	3-55/64	3-1/8-8	1-1/16	42-17442
22C/22B	3-57/64	3-3/8-8	1-3/16	42-13206-99
22D	3-59/64	3-3/8-8	1-3/16	42-13204-99
22D	3-55/64	3-3/8-8	1-1/16	42-17577

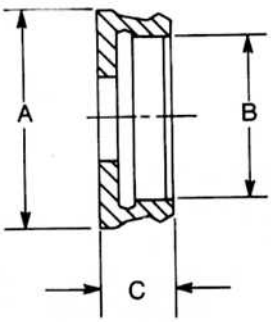

Note: If the Chuck Nut you need is not listed, contact your Authorized Repair Parts Distributor for help.

CHUCK SLEEVES

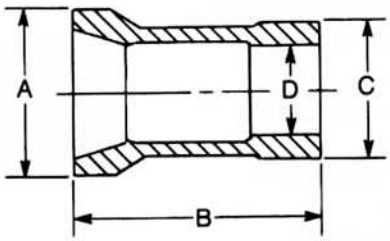

Collet Size	Cap.	A	B	C	D	Tool No.
00	3/8	1.058	2.875	.875	.6875	42-4463-1-99
00	1/2	1.312	2.437	1.312	.687	42-13618-99
10	1/2	1.312	2.365	1.187	.937	42-13619-1
11	5/8	1.750	3.311	1.374	1.062	42-4397-99
10	3/4	1.750	2.720	1.347	1.187	42-19651
11	3/4	1.750	2.720	1.347	1.187	42-21043
11	3/4	1.875	2.813	1.500	1.062	42-13606-99
11C	3/4	1.750	2.720	1.347	1.187	42-19690
11C	3/4	1.875	2.813	1.500	1.188	42-13605-99
22	1	2.250	4.187	1.875	1.500	42-4464-99
22(#3)	1	3.700	4.255	2.93	1.500	42-21167
22	1-1/4	2.500	4.255	2.125	1.500	42-7895
22C	1-1/4	2.500	4.255	2.125	1.750	42-7896-1
22C	1-1/2	2.750	4.255	2.437	1.750	42-11689-99
22C(#3)	1-1/4	3.700	4.255	2.93	1.750	42-21166
22	1-1/2	2.750	4.255	2.437	1.500	42-10539-99
22D	1-1/2	2.750	4.255	2.437	2.125	42-10419-99
22D(#3)	1-1/2	3.700	4.255	2.93	2.125	42-20351
23-23M	2	3.700	4.255	2.93	2.600	42-20355

Note: For Chuck Sleeves for Double Grip Collet Arrangement, contact an authorized Replacement Parts Distributor. If the Chuck Sleeve you need is not listed, contact your authorized Repair Parts Distributor for help.

CAM ROLLS AND PINS

B & S cam rolls and pins provide even wear through accuracy and high concentricity. With these rolls and pins you can expect:

- Concentricity of .0001 T.I.R. for exact cross and turret slide motion.
- Ground bore with no drag on pins, no slide on cams, no flat spots.
- Chrome-plated pins for less friction between the roll and pin than between the roll and cam.

Part Name	Used On	O.D.	I.D.	Length	Pin/Flat	Tool No.
No. 00 Machines - Prior to serial #12852						
Pin	Lead Lever & Cross Slides	.250	-	1.125	Flat	91-90-83
Roller	Lead Lever & Cross Slides	.500	.250	.310	-	91-215-8
Pin	Cross Slides	.250	-	1.031	Flat	91-90-645
No. 00 Machines - Beginning Serial #12852 and 542-00-3300						
Pin	Lead Lever	.250	-	1.312	Pin	91-90-705
Pin	Cross & Vertical Slides	.250	-	1.031	Pin	91-90-700
Roller	Lead Lever, Cross & Vert. Sl.	.500	.250	.371	-	91-215-211
Pin	Lead Lever, Cross & Vert. Sl	.250	-	1.250	Pin	91-90-738
No. 0 Machine - Prior to Serial #8020						
Pin	Lead Lever & Cross Slides	.250	-	1.125	Flat	91-90-83
Roller	Lead Lever & Cross Slides	.562	.250	.371	-	91-215-9
#0 Machine - Beginning Serial #8020						
Pin	Lead Lever	.250	-	1.312	Pin	91-90-705
Pin	Cross & Vertical Slides	.250	-	1.125	Pin	91-90-83
Roller	Lead Lever, Cross & Vert. Sl.	.562	.250	.434	-	91-215-212
Pin	Cross & Vertical Slides	.250	-	1.250	Pin	91-90-738
Roller	Lead Lever, Cross & Vert. Sl.	.562	.250	.371	-	91-215-9
#2 Machines - Prior to Serial #7351						
Pin	Lead Lever & Cross Slides	.312	-	1.187	Flat	91-90-82
Roller	Lead Lever & Cross Slides	.625	.312	.434	-	91-215-3
#2 Machines - Beginning Serial #7351 and 542-2-3100						
Pin	Lead Lever, Cross & Vertical Slides (Except 542-2-3100)	.312	-	1.312	Pin	91-90-752
Roller	Lead Lever, Cross & Vert. Sl.	.625	.313	.496	-	91-215-220
Pin	Lead Lever (Ser#542-2-3100)	.311	-	1.813	Pin	42-17185
#2 Ultramatic						
Pin	Lead Lever	.311	-	2.000	Pin	42-17185-1
Roller	Lead Lever	.625	.313	.623	-	42-21653

BUSHING BLANKS

Bushing blanks are used in various holders to hold drills, taps, reamers, etc. They are turned to size and incorporate a loose shoe for clamping the tool. A circular spring in a groove, holds the shoe in place .

Mach Where Used	O.D.	Lg.	Tool No.
00 and 00G Auto.	1/4	7/16	211-11015
0 and 0G Auto.	3/8	7/16	211-11008
00 Hand, 0 W.F.	1/2	9/16	211-11016
1 Wire Feed	1/2	3/4	211-11010
2 Hand, 2 W.F.	5/8	7/8	211-11011
	3/4	1	211-11012
	1	1-1/4	211-11013
	1-1/4	1-5/8	211-11019
	1-1/2	1-3/4	211-11014
4 Auto.	1-3/4	1-3/4	211-11018
175-120 & 176-120 Pointing Tools	3/4	3/8*	211-17510

* Includes Lip 1/16 Wide, 13/16 Dia.

SLOTTED BUSHING BLANKS

Slotting bushing blanks are used in the transfer arm of slotting attachments for carrying the workpiece from the spindle to the attachment cutter. They are finished to fit the transfer arm work holder.

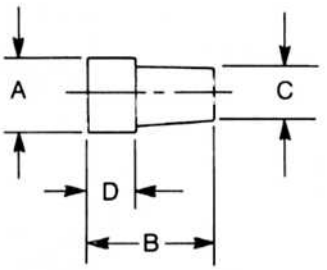

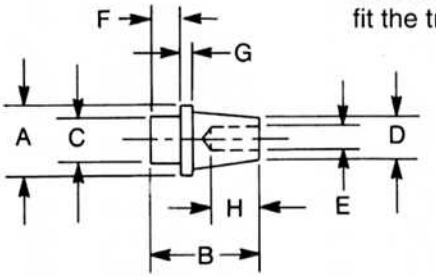

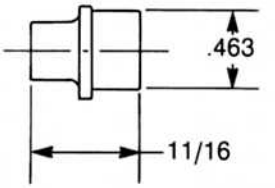

42-6640-99

Mach Where Used	A.	B	C	D	E	F	G	H	Tool No.
00 and 00G Auto.	9/16	1	.45	3/8	-	-	-	-	42-14599-99
00 and 00G Auto.	9/16	1	3/8	.45	1/4	5/16	1/16	1/2	42-14598-99
0G Auto.	11/16	1-1/8	.60	3/8	-	-	-	-	42-14601-99
0G Auto.	11/16	1-1/8	1/2	.60	3/8	5/16	1/16	1/2	42-14600-99
2G Auto	7/8	1-1/2	.75	1/2	-	-	-	-	42-14603-99
2G Auto	7/8	1-1/2	5/8	.75	1/2	3/8	1/8	5/8	42-14602-99
2 Auto	1-1/16	1-1/2	.903	1/2	-	-	-	-	42-14603-1
2 Auto	1-1/16	1-1/2	3/4	.903	5/8	3/8	1/8	5/8	42-14602-1-99
00 Auto	Dimensions same as 42-14598-99 except noted								42-6640-99

Work Bushing Blanks for Burring Attachments

0G & 00G	3/4	1/2	11/16	-	-	-	-	-	42-13661-99
2G	1-1/4	3/4	1-1/8	-	-	-	-	-	42-13653-99

TURNING BLADES (TOOL BITS) HIGH SPEED STEEL

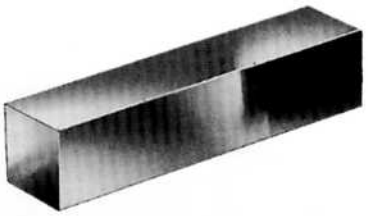

B & S blades are made of carefully hardened and ground High Speed Steel to provide long operating life and clean cutting qualities on a variety of materials, in toolroom and production applications.

Size, Inches	Tool No.
3/16 X 1/4 X 1-1/4	711-94072
1/4 X 1/4 X 2-1/2	711-94074
1/4 X 5/16 x 1-5/8	711-94075
1/4 X 3/8 X 3	711-94076
1/4 X 1/2 X 4	711-94078
1/4 X 3/4 X 2-1/2	711-94079
5/16 X 5/16 X 2-1/2	711-94080
5/16 X 3/8 X 1-3/4	711-94081
5/16 X 7/16 x 3-1/2	711-94082
3/8 X 3/8 X 3	711-94083
3/8 X 7/16 X 2-1/2	711-94084

Size, Inches	Tool No.
3/8 X 1/2 X 4	711-94085
7/16 X 7/16 X 3-1/2	711-94086
7/16 X 1/2 X 1-3/4	711-94087
1/2 X 1/2 X 4	711-94088
1/2 X 5/8 x 4-1/2	711-94089
1/2 X 3/4 X 5	711-94090
3/4 X 3/4 X 5	711-94091
3/4 X 1 X 6	711-94071
1/2 X 1/2 X 2-3/4	711-94092*
7/16 X 6/16 X 2-1/8	711-94093*

*These only have 24° bevel at each end.

Recommended Angles for Finishing Blades

Tool No.	Angle "A"	Tool No.	Angle "A"	Tool No.	Angle "A"
711-45-400	24°	711-54-122	24°	711-155-220	12°
711-45-500	24°	711-58-122	24°	711-155-222	12°
711-45-600	24°	711-60-100	24°	711-160-220	15°
711-45-620	24°	711-60-120	24°	711-160-222	15°
711-45-322	24°	711-60-122	24°	711-161-220	15°
711-45-422	24°	711-60-222	24°	711-161-222	15°
711-46-300	24°	711-60-324	24°	711-162-100	15°
711-46-400	24°	711-61-100	24°	711-162-124	15°
711-46-220	24°	711-61-120	24°	711-163-100	15°
711-46-322	24°	711-61-122	24°	711-172-200	24°
711-49-110	24°	711-61-222	24°	711-172-120	24°
711-49-120	24°	711-61-224	24°	711-172-222	24°
711-49-122	24°	711-62-100	8°	711-173-122	24°
711-51-100	24°	711-62-120	8°	711-175-300	8°
711-51-320	24°	711-66-100	10°	711-175-220	8°
711-52-100	24°	711-66-120	10°	711-175-222	8°
711-52-220	24°	711-66-122	10°	711-175-224	8°
711-52-222	24°	711-125-324	15°	711-176-300	8°
711-52-124	24°	711-125-424	15°	711-176-222	8°
711-53-122	24°	711-155-200	12°	711-176-124	8°

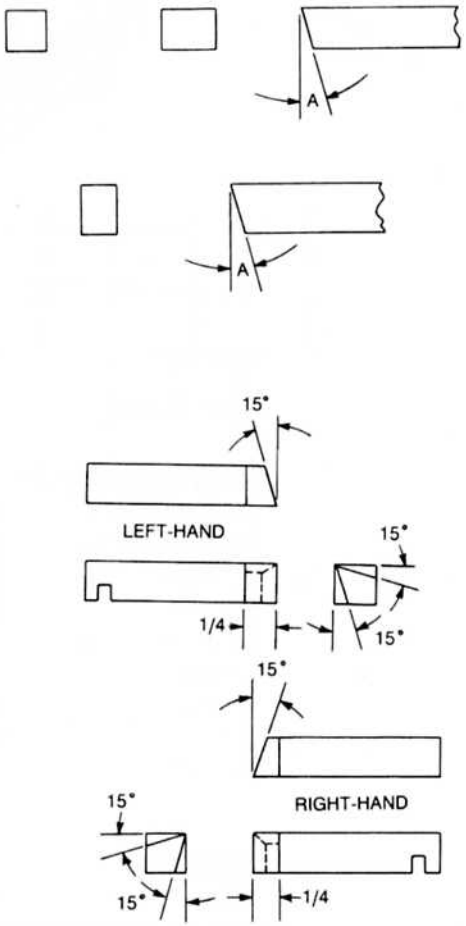

TOOL NUMBER: 711-165-100, 711-165-120, 711-165-122

T TYPE, JOHNSON TYPE AND TURNING BLADES

T TYPE BLADES

High Speed Steel for Cutting-Off Tool Posts and Vertical Slides

Thickness	Height	Tool No.
.040"	1/2"	**711-153-100**
1/16"	1/2"	**711-153-200**
3/32"	1/2"	**711-153-300**
1/16"	11/16"	**711-153-522**
3/32"	11/16"	**711-153-122**
1/8"	11/16"	**711-153-222**
5/32"	11/16"	**711-153-322**
3/16"	11/16"	**711-153-422**
3/16"	7/8"	**711-153-224**
1/8"	7/8"	**711-153-124**

JOHNSON TYPE BLADES

High Speed Steel for Cutting-Off Tool Posts and Vertical Slides

Height and Thickness	Tool No.
1/2" X 1/32"	**711-154-100**
1/2" X 1/16"	**711-154-200**
1/2" X 5/64"	**711-154-300**
1/2" X 3/32"	**711-154-400**
1/2" X 1/8"	**711-154-500**
11/16" X 1/16"	**711-154-110**
11/16" X 3/32"	**711-154-210**
11/16" X 1/8"	**711-154-310**
11/16" X 5/32"	**711-154-410**
11/16" X 3/16"	**711-154-510**
13/16" X 1/16"	**711-154-111**
13/16" X 3/32"	**711-154-211**
13/16" X 1/8"	**711-154-311**
13/16" X 5/32"	**711-154-411**
13/16" X 3/16"	**711-154-511**
1" X 3/16"	**711-154-124**

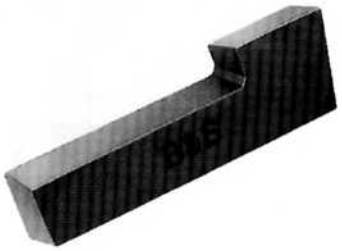

TURNING BLADES

The Blades listed below are M-2 High Speed Steel and are specially adapted for use with No. 215 Swing Tools.

Tools,Where Used	Tool No.
711-215-100	**211-95034**
711-215-122	**211-95036**

KNURLING DATA

Knurling is usually produced on stock which has been turned prior to the knurling operation to produce the best form and size. While there are many types of knurl holders in general use, such as turret holders, cross-slide holders, top holders and knurling swing holders, the Adjustable Knurl Holders, utilizing two knurls and operated from the turret are the most efficient and most frequently used.

STRAIGHT KNURLING

With Adjustable Knurl Holders (B&S No. 185 type), straight knurling is accomplished in either of two manners from the turret: —

First, with two straight knurls set with the teeth parallel to the axis of the work to produce a series of parallel serrations as the knurls pass over the end of and along the length of the piece.

Second, with two diagonal knurls set with the teeth parallel with the direction of travel and the sides of the knurls at an angle with the work so the angle and direction of the lead on the teeth of both knurls is alike. This method is preferred by many operators because of the burnishing effect created by the generating action in the displacement of the material on the work.

DIAGONAL KNURLING

Using the Adjustable Knurl Holder, diagonal knurling, with all the serrations in the same direction, is accomplished by using two straight knurls set at opposite angles with the work. This method is usually preferred for producing smoother, more even knurling.

Two diagonal knurls with the same angle and lead will produce a similar result. In this case, the teeth of the knurls are set at an angle with the axis of the work.

DIAMOND KNURLING

Diamond knurls of the male type are usually produced by setting two straight knurls at the same angle. As the knurls advance along the piece, a diamond shape knurl is raised on the knurled diameter.

Diamond knurls of the male type may also be produced by using two diagonal knurls of opposite hand (1 right hand and 1 left hand diagonal knurl) and orienting them to achieve the diamond desired.

Special shapes, including knurls for female knurling, are available. Send complete data to:

B & S Screw Machine Services, Inc.
421 Lincoln Avenue
Warwick, RI 02888
U.S.A.

STRAIGHT KNURLING

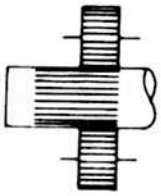

Two straight knurls

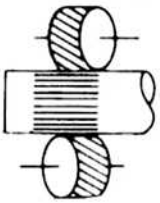

Preferred method
Two R.H. diagonal (shown)
or
Two L.H. diagonal

DIAGONAL KNURLING

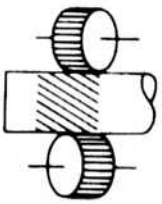

Preferred method
Two straight knurls set at opposite angles

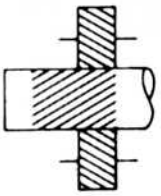

Two R.H. diagonal (shown)
or
Two L.H. diagonal

DIAMOND KNURLING

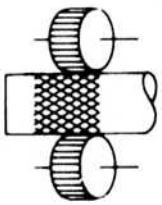

Preferred method
Two straight knurls set at same angles

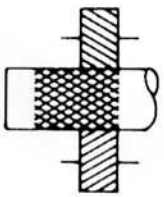

One R.H. diagonal
and
One L.H. diagonal

CIRCULAR PITCH AND DIAMETRAL PITCH KNURLS

- All Stock Knurls are through hardened High Speed Steel, without bevels.
- Knurl diameters are held within +.0000" to -.0015" of one another to eliminate need to "mike and match" for size.
- Male Diamond Knurls are produced by a Right Hand and a Left Hand Knurl used in pairs, or by Straight Knurls in an Adjustable Holder.
- Accuracy and sizes of Diametral Pitch Knurls meet American Standard ASA B94.6-1966.

TRANSVERSE TPI MEASURED ALONG EDGE OF KNURLING.

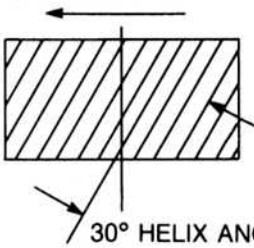

Special Knurls — Made to Order

When ordering special Knurls, please furnish blueprints or specifications which include the following information:

1. Quantity
2. Outside diameter of Knurl.
3. Over-all width of Knurl.
4. Hole diameter.
5. Width of Knurl face and diameter of shoulders.
6. Knurl pattern — straight, diagonal, R.H. or L.H., Male or Female Diamond. (Helix Angle of diagonal or diamond teeth is normally 30°.)
7. Total number of teeth on Knurl.

Approximate Increase in Knurled Diameters With Standard B & S Knurls

Normal TPI	Straight and Diagonal Knurling
12	.034
16	.025
20	.020
25	.016
30	.013
35	.011
40	.009
50	.007
80	.004

DIAMETRAL PITCH (Straight Tooth)

O.D.	Width	Hole	DP*	Total Teeth	Tool No.	Will fit the Following Knurl Holders
			64	32	**711-8064-100**	
1/2"	3/16"	3/16"	92	48	**711-8096-100**	
			128	64	**711-8128-100**	
			160	80	**711-8160-100**	Diametral
			64	40	**711-8064-120**	Pitch Knurls
5/8"	1/4"	1/4"	96	60	**711-8096-120**	will Fit Knurl
			128	80	**711-8128-120**	Holders
			160	100	**711-8160-120**	Shown with
			64	48	**711-8064-122**	Circular Pitch
3/4"	1/4"	1/4"	96	72	**711-8096-122**	Knurls of
			128	96	**711-8128-122**	equivalent size.
			160	120	**711-8160-122**	(See Page 121)
			64	48	**711-8064-123**	
3/4"	3/8"	1/4"	96	72	**711-8096-123**	
			128	96	**711-8128-123**	
			160	120	**711-8160-123**	

* DP is Diametral Pitch

DIAMETRAL PITCH KNURLS

Diametral Pitch
Diagonal Tooth RIGHT-HAND (30° Helix)

O.D.	Width	Hole	DP*	Total Teeth	Tool No.
1/2"	3/16"	3/16"	64	32	**711-8064-200**
			92	48	**711-8096-200**
			128	64	**711-8128-200**
			160	80	**711-8160-200**
5/8"	1/4"	1/4"	64	40	**711-8064-220**
			96	60	**711-8096-220**
			128	80	**711-8128-220**
			160	100	**711-8160-220**
3/4"	1/4"	1/4"	64	48	**711-8064-222**
			96	72	**711-8096-222**
			128	96	**711-8128-222**
			160	120	**711-8160-222**
3/4"	3/8"	1/4"	64	48	**711-8064-722**
			96	72	**711-8096-722**
			128	96	**711-8128-722**
			160	120	**711-8160-722**

Will fit the Following Knurl Holders

Diametral Pitch Knurls will Fit Knurl Holders Shown with Circular Pitch Knurls of equivalent size. (See page 121.)

Diametral Pitch
Diagonal Tooth LEFT-HAND (30° Helix)

O.D.	Width	Hole	DP*	Total Teeth	Tool No.
1/2"	3/16"	3/16"	64	32	**711-8064-300**
			92	48	**711-8096-300**
			128	64	**711-8128-300**
			160	80	**711-8160-300**
5/8"	1/4"	1/4"	64	40	**711-8064-320**
			96	60	**711-8096-320**
			128	0	**711-8128-320**
			160	100	**711-8160-320**
3/4"	1/4"	1/4"	64	4 8	**711-8064-322**
			96	72	**711-8096-322**
			128	96	**711-8128-322**
			160	120	**711-8160-322**
3/4"	3/8"	1/4"	64	48	**711-8064-822**
			96	72	**711-8096-822**
			128	96	**711-8128-822**
			160	120	**711-8160-822**

* DP is diametral pitch.

Note: The American Standard on Knurling, ASA B94.6-1966 covers Diametral Pitch Knurls and has been established to facilitate Knurling work blank diameters that are multiples of 1/64" or 1/32". The 64 and 128 diametral pitches are for work blank diameters of 1/64" increments and the 96 and 160 pitches for 1/32" increments.

The Standard recommends that use of 64 pitch be avoided and that 96 pitch be given preference to simplify tooling.

Straight Tooth

O.D.	Width	Hole	TPI*	Total Teeth	Tool No.	Will Fit the Following Knurl Holders
			20	31	**711-8020-400**	B & S: -
			25	39	**711-8025-400**	711-185-200(00D)
			30	47	**711-8030-400**	711-190-100(00AA)
			35	54	**711-8035-400**	711-195-100(00BA)
1/2"	3/16"	3/16"	40	62	**711-8040-400**	711-200-100(00CA)
			41	64	**711-8041-400**	711-210-100(00RA)
			47	73	**711-8047-400**	Boyar-Schultz 00K
			50	78	**711-8050-400†**	Detterbeck 00
			53	80	**711-8053-400†**	Barnaby KT00
			80	124	**711-8080-400†**	R & L 00
			16	31	**711-8016-420**	B & S: -
			19	37	**711-8019-420**	711-185-220(20D)
			20	39	**711-8020-420**	711-185-322(22DA)
			24	47	**711-8024-420**	711-190-120(20AA)
			25	49	**711-8025-420**	711-195-120(20BA)
5/8"	1/4"	1/4"	29	56	**711-8029-420**	711-200-120(20C)
			30	58	**711-8030-420**	711-210-120(20KA)
			35	68	**711-8035-420**	711-211-122
			40	78	**711-8040-420**	Boyar-Schultz OK
			41	80	**711-8041-420**	Detterbeck 0
			47	91	**711-8047-420**	Barnaby KTO
			50	97	**711-8050-420†**	R & L 1, 2, 3
			16	37	**711-8016-422**	
			19	44	**711-8019-422**	
			20	47	**711-8020-422**	B & S: -
			24	56	**711-8024-422**	711-185-224(24A)
			25	58	**711-8025-422**	711-190-122(22AA)
3/4"	1/4"	1/4"	29	68	**711-8029-422**	711-195-122(22C)
			30	70	**711-8030-422**	711-210-122(22KB)
			35	82	**711-8035-422**	711-211-122
			40	93	**711-8040-422**	Boyar-Schultz 2K
			41	96	**711-8041-422**	Detterbeck 2
			50	117	**711-8050-422†**	
			80	187	**711-8080-422†**	
			12	28	**711-8012-423**	B & S: -
			16	37	**711-8016-423**	711-185-224(24A)
			20	47	**711-8020-423**	711-190-122(22AA)
3/4"	3/8"	1/4"	25	58	**711-8025-423**	711-195-122(22BA)
			30	70	**711-8030-423**	711-200-122(22C)
			40	93	**711-8040-423**	711-210-122(22KB)
			50	117	**711-8050-423†**	711-211-122
			80	187	**711-8080-423†**	Armstrong, 1K, 2K, 3K-1, 3K-2, 673, 674 All Pratt & Whitney J.H. Williams 1K, 2K, 3K1, 3K2 Graham 2,3 Barnaby KT-2G Slitters 50-1, 50-2, 50-3

* TPI is Normal Teeth per Inch.

† Included angle of teeth of designated Circular Pitch Knurls is 70°.
All Diametral Knurls have an included angle of 90°.

CIRCULAR PITCH KNURLS

Diagonal Tooth
RIGHT-HAND (30° Helix)

O.D.	Width	Hole	TPI*	Total Teeth	Tool No.	Will Fit the Following Knurl Holders
1/2"	3/16"	3/16"	20	27	**711-8020-500**	
			25	34	**711-8025-500**	
			30	40	**711-8030-500**	
5/8"	1/4"	1/4"	20	34	**711-8020-520**	
			25	45	**711-8025-520**	
			30	50	**711-8030-520**	
			40	67	**711-8040-520**	
			50	84	**711-8050-520†**	
3/4"	1/4"	1/4"	20	40	**711-8020-522**	
			25	40	**711-8025-522**	
			30	60	**711-8030-522**	
			40	81	**711-8040-522**	
			50	101	**711-8050-522†**	
3/4"	3/8"	1/4"	12	24	**711-8012-523**	Circular Pitch Diagonal Tooth Knurls will Fit Knurl Holders shown with Circular Pitch Straight Tooth Knurls of equivalent size. (See page 121)
			20	40	**711-8020-523**	
			25	50	**711-8025-523**	
			30	60	**711-8030-523**	
			40	81	**711-8040-523**	
			50	101	**711-8050-523†**	
			80	162	**711-8080-523†**	

Diagonal Tooth
LEFT-HAND (30° Helix)

O.D.	Width	Hole	TPI*	Total Teeth	Tool No.
1/2"	3/16"	3/16"	20	27	**711-8020-600**
			25	34	**711-8025-600**
			30	40	**711-8030-600**
5/8"	1/4"	1/4"	20	34	**711-8020-620**
			25	42	**711-8025-620**
			30	50	**711-8030-620**
			40	67	**711-8040-620**
			50	67	**711-8050-620†**
3/4"	1/4"	1/4"	20	40	**711-8020-622**
			25	50	**711-8025-622**
			30	60	**711-8030-622**
			40	81	**711-8040-622**
			50	101	**711-8050-622†**
3/4"	3/8"	1/4"	12	24	**711-8012-623**
			20	40	**711-8020-623**
			25	50	**711-8025-623**
			30	60	**711-8030-623**
			40	81	**711-8040-623**
			50	101	**711-8050-623†**
			80	162	**711-8080-623†**

* TPI is Normal Teeth per Inch.
† Included angle of teeth of designated Circular Pitch Knurls is 70°.
All other Circular Pitch Knurls have an included angle of 90°.

Description	Ordering No.
Set-Up and Operation of B & S Automatic Screw Machines 14 self-covered booklets for training operators. Progressively develops in detail from simple jobs to more intricate work requiring turret tools and attachments.	**783-1-301**
Construction and Use of Automatic Screw Machines Includes instructions on set-up and operation, as well as designing cams. It has many useful tables and illustrations of actual jobs. The Construction and Use of Automatics covers the 00G, 0G and 2G Automatic Screw Machines.	**783-1-502**
Automatic Screw Machine Handbook The Automatic Screw Machine Handbook includes comprehensive instructions on the set-up and operation, as well as tooling and cam design, for Automatic Screw Machines and attachments. The handbook also has many tables and illustrations of actual jobs. The machines it covers are: 00 Beginning Serial No. 542-00-3300 to 542-00-6800 2 Beginning Serial No. 542-2-3100 to 542-2-5601 Also a supplement covering the 00G, 0G and 2G	**42-99990-1**
Automatic Screw Machine Cam & Tool Design Tables 103 pages of reference tables covering a very wide range of cam designs essential to the cam & tool designer. Not an instruction book.	**783-1-505-2**
Cam & Tool Design 81 pages covering methods for designing cams and tools for Automatic Screw Machines utilizing the newest techniques.	**783-1-506**
Cam Layout Sheets, Pad (Sheets are 820-294-309-1)	**42-99990-135**
Automatic Screw Machine Troubleshooting Guide The guide explains in detail the proper procedures for repairs. It is specifically for the Ultramatics with some supplementary information on the older machines. The guide goes beyond the normal day-to-day maintenance that is covered in the Operation and Maintenance Manual.	**42-90006**
Screw Machine Engineering Manual Includes technical data pertaining to the design of cams and circular tools. Contains charts, graphs and tables for engineering personnel.	**42-90014**
Advanced Screw Machine Engineering Manual Includes technical data covering screw machine attachments.	**42-90015**

NUMERICAL INDEX

Tool No.	Description	Page
710-1004-100 to 710-8164-223	SPRING COLLETS	4-20
710-1004-710 to 710-3164-723	STUB COLLETS	4-20
710-11224-223 to 710-12224-223	MASTER COLLETS	4-8, 13, 20
710-16004 to 710-18148-123	FEEDING FINGERS	4-8, 21-25
710-16204-223 to 710-16224-223	INVERTEDFEED FINGER	21, 25
710-21148-126 to 710-26056-122	MASTER FEEDING FINGER	22, 25
710-31048-226 to 710-33148-226	COLLET PADS	20
710-56004-100 to 710-58040-122	NYLON FEED FINGER PAD	26, 27
710-91006-1 to 710-92019-1	COLLET BLANKS	20
711- 5- 100	ADAPTER 00	28
711- 5- 110	ADAPTER 10A	28
711- 5- 111	ADAPTER 11-10	28
711- 5- 120	ADAPTER 20A-10	28
711- 5- 121	ADAPTER 21A-10	28
711- 5- 122	ADAPTER 22-10	28
711- 5- 123	ADAPTER 23-22	28
711- 5- 210	ADAPTER 10A-00	28
711- 5- 211	ADAPTER 11-11A-11AA	28
711- 5- 221	ADAPTER 21A-11A-11AA	28
711- 5- 222	ADAPTER 22-11A-11AA	28
711- 5- 223	ADAPTER 23-22H	28
711- 5- 227	ADAPTER 27-23	28
711- 5- 310	ADAPTER 10A-10	28
711- 5- 320	ADAPTER 20-11	28
711- 5- 321	ADAPTER 21A-11	28
711- 5- 322	ADAPTER 22D-22	28
711- 5- 323	ADAPTER 23-22D	28
711- 5- 327	ADAPTER 27-22D	28
711- 5- 410	ADAPTER 10AA-10	28
711- 5- 420	ADAPTER 20-11A-11AA	28
711- 5- 422	ADAPTER 22D-22H	28
711- 5- 423	ADAPTER 23	28
711- 5- 427	ADAPTER 27-22H	28
711- 5- 510	ADAPTER 10AA-10A	28
711- 5- 522	ADAPTER 22H	28
711- 5- 523	ADAPTER 23-22DD	28
711- 5- 527	ADAPTER 27-22	28
711- 5- 622	ADAPTER 22H-10	28
711- 5- 627	ADAPTER 27-22DD	28
711- 5- 722	ADAPTER 22H-11A-11AA	28
711- 5- 727	ADAPTER 27-10	28
711- 5- 822	ADAPTER 22H 22	28
711- 5- 827	ADAPTER 27-11A OR 11AA	28
711- 5- 922	ADAPTER 22D-10	28
711- 5-1022	ADAPTER 22D-11A-11AA	28
711- 5-1222	ADAPTER 22-11	28
711- 5-1322	ADAPTER 22H-11	28
711- 5-1422	ADAPTER 22DD-10	28
711- 5-1522	ADAPTER 22DD-11AA	28
711- 5-1622	ADAPTER 22DD-22	28
711- 5-1722	ADAPTER 22DD-22H	28
711- 5-1822	ADAPTER 22DD-22D	28
711- 8- 100	C.S. TOOL CENTERING GAGE	108
711- 8- 122	C.S. TOOL CENTERING GAGE	108
711-27- 120	ADJUST HOLLOW MILL	102
711-27- 122	ADJUST HOLLOW MILL	102
711-27- 200	ADJUST HOLLOW MILL	102
711-35- 111	BLADE HOLLOW MILL	103
711-35- 112	BLADE HOLLOW MILL	103
711-37- 120	BLADE HOLLOW MILL	103
711-37- 122	BLADE HOLLOW MILL	103
711-37- 200	BLADE HOLLOW MILL	103
711-42- 120	BACK REST HOLLOW MILL	102
711-42- 122	BACK REST HOLLOW MILL	102
711-42- 200	BACK REST HOLLOW MILL	102
711-44- 100	EXTEND ROLL HOLDERS	38
711-44- 120	EXTEND ROLL HOLDERS	38
711-44- 122	EXTEND ROLL HOLDERS	38
711-44- 200	EXTEND ROLL HOLDERS	38
711-44- 220	EXITND ROLL HOLDERS	38
711-44- 222	EXTEND ROLL HOLDERS	38
711-44- 300	EXTEND ROLL HOLDERS	38
711-45- 322	BOX TOOL RH	32
711-45- 400	BOX TOOL RH	32
711-45- 500	BOX TOOL RH	32
711-45- 620	BOX TOOL RH	32
711-46- 322	BOX TOOL LH	32
711-46- 400	BOX TOOL LH	32
711-51- 200	ROLL BACK BOX TOOL RH	34-37
711-51- 420	ROLL BACK BOX TOOL RH	34-37
711-51- 422	ROLL BACK BOX TOOL RH	34-37
711-52- 200	ROLL BACK BOX TOOL LH	34-37
711-52- 222	ROLL BACK BOX TOOL LH	34-37
711-52- 322	ROLL BACK BOX TOOL LH	34-37
711-53- 222	ROLL BACK BOX TOOL RH	34-37
711-54- 122	ROLL BACK BOX TOOL LH	34-37
711-54- 222	ROLL BACK BOX TOOL LH	34-37
711-55- 100	ROLLS STRAIGHT (6)	38, 104
711-55- 120	ROLLS STRAIGHT (6)	38
711-55- 121	ROLLS BURNISHING TOOL (6)	104
711-55- 122	ROLLS STRAIGHT (6)	38, 104
711-56- 100	ROLLS TAPERED (6)	38
711-56- 120	ROLLS TAPERED (6)	38
711-56- 122	ROLLS TAPERED (6)	38
711-57- 100	SETTING GAGE 00	40
711-57- 122	SETTING GAGE #2	40
711-57- 123	SETTING GAGE #3	40
711-60- 100	BALANCE TURN TOOL RH	39

Tool No.	Description	Page
711-60- 223	BALANCE TURN TOOL RH	40
711-60- 300	BALANCE TURN TOOL RH	40
711-60- 322	BALANCE TURN TOOL RH	40
711-61- 223	BALANCE TURN TOOL LH	40
711-61- 300	BALANCE TURN TOOL LH	40
711-61- 322	BALANCE TURN TOOL LH	40
711-62- 100	SLIDE TOOL	42
711-62- 120	SLIDE TOOL	42
711-62- 122	SLIDE TOOL	42
711-62- 222- 1	SLIDE TOOL BODY	44
711-63- 122	SLIDE HEAD TURNING	44
711-64- 100	DRILL & CHAM TOOL	48
711-64- 120	DRILL & CHAM TOOL	48
711-64- 122	DRILL & CHAM TOOL	48
711-65- 100	ADJUST TOOL HOLDER	50
711-65- 111	ADJUST TOOL HOLDER	50
711-65- 112	ADJUST TOOL HOLDER	50
711-65- 122	ADJUST TOOL HOLDER	50
711-65- 123	ADJUST TOOL HOLDER	50
711-65- 210	ADJUST TOOL HOLDER	50
711-65- 220	ADJUST TOOL HOLDER	50
711-66- 100	DRILL & TURN TOOL	52
711-66- 120	DRILL & TURN TOOL	52
711-66- 122	DRILL & TURN TOOL	52
711-66- 123	DRILL & TURN TOOL	52
711-67- 100	FLOATING REAM HOLDER	54
711-67- 120	FLOATING REAM HOLDER	54
711-67- 122	FLOATING REAM HOLDER	54
711-67- 200	FLOATING REAM HOLDER	54
711-68-1	STUB COLLET PACKAGE	57
711-68- 100	STUB COLLET HOLDER	56
711-68- 120	STUB COLLET HOLDER	56
711-68- 122	STUB COLLET HOLDER	56
711-83- 120	THREAD ROLL HOLDER NAR	58
711-83- 122	THREAD ROLL HOLDER NAR	58
711-83- 200	THREAD ROLL HOLDER NAR	58
711-84- 100	THREAD ROLL HOLDER WIDE	58
711-84- 122	THREAD ROLL HOLDER WIDE	58
711-90- 100	ACORN DIE HOLDER	60
711-90- 110	ACORN DIE HOLDER	60
711-90- 111	ACORN DIE HOLDER	60
711-90- 112	ACORN DIE HOLDER	60
711-95- 200	DIE CLOSER	60
711- 100- 320	TAP HOLDER NON-REL	62
711- 100- 322	TAP HOLDER NON-REL	62
711- 100- 400	TAP HOLDER NON-REL	62
711- 103- 100	TAP HOLDER NON-REL	62
711- 105- 200	TAP HOLDER RELEASE	62
711- 105- 311	TAP HOLDER RELEASE	62
711- 105- 312	TAP HOLDER RELEASE	62
711- 109- 200	ADJUST V TOOL HOLDER	64
711- 109- 220	ADJUST V TOOL HOLDER	64
711- 109- 222	ADJUST V TOOL HOLDER	64

Tool No.	Description	Page
711- 111- 200	BORING TOOL HOLDER	66
711- 111- 220	BORING TOOL HOLDER	66
711- 111- 322	BORING TOOL HOLDER	66
711- 130- 222	CIRCULAR TOOL POST	68
711- 131- 222	CIRCULAR TOOL POST	68
711- 133- 222	CIRCULAR TOOL POST	68
711- 134- 222	CIRCULAR TOOL POST	68
711- 135- 100	CIRCULAR TOOL POST	68
711- 135- 120	CIRCULAR TOOL POST	68
711- 135- 122	CIRCULAR TOOL POST	68
711- 136- 100	CIRCULAR TOOL POST	68
711- 136- 120	CIRCULAR TOOL POST	68
711- 136- 122	CIRCULAR TOOL POST	68
711- 146- 100	CUTOFF TOOL POST L BACK	70
711- 146- 120	CUTOFF TOOL POST L BACK	70
711- 146- 122	CUTOFF TOOL POST L BACK	70
711- 147- 100	CUTOFF TOOL POST H BACK	70
711- 147- 120	CUTOFF TOOL POST H BACK	70
711- 147- 122	CUTOFF TOOL POST H BACK	70
711- 147- 200	CUTOFF TOOL POST H BACK	70
711- 147- 222	CUTOFF TOOL POST H BACK	70
711- 148- 100	CUTOFF TOOL POST L FRONT	70
711- 148- 120	CUTOFF TOOL POST L FRONT	70
711- 148- 122	CUTOFF TOOL POST L FRONT	70
711- 153- 100	BLADE T TYPE .040 1/2	117
711- 153- 122	BLADE T TYPE 3/32 11/1	117
711- 153- 124	BLADE T TYPE 1/8 7/8	117
711- 153- 200	BLADE T TYPE 1/16 1/2	117
711- 153- 222	BLADE T TYPE 1/8 11/16	117
711- 153- 224	BLADE T TYPE 3/16 7/8	117
711- 153- 300	BLADE T TYPE 3/32 1/2	117
711- 153- 322	BLADE T TYPE 5/32 11/16	117
711- 153- 422	BLADE T TYPE 3/16 11/16	117
711- 153- 522	BLADE T TYPE 1/16 11/16	117
711- 154- 100	BLADE J 1/2 1/32	117
711- 154- 110	BLADE J 11/16 1/16	117
711- 154- 111	BLADE J 13/16 1/16	117
711- 154- 124	BLADE J 1 3/16	117
711- 154- 200	BLADE J 1/2 1/16	117
711- 154- 210	BLADE J 11/16 3/32	117
711- 154- 211	BLADE J 13/16 3/32	117
711- 154- 300	BLADE J 1/2 5/64	117
711- 154- 310	BLADE J 11/16 1/8	117
711- 154- 311	BLADE J 13/16 1/8	117
711- 154- 400	BLADE J 1/2 3/32	117
711- 154- 410	BLADE J 11/16 5/32	117
711- 154- 411	BLADE J 13/16 5/32	117
711- 154- 500	BLADE J 1/2 1/8	117
711- 154- 510	BLADE J 11/16 3/16	117
711- 154- 511	BLADE J 13/16 3/16	117
711- 160- 220	TOOL POST SQ TOOL FR	72
711- 160- 322	TOOL POST SQ TOOL FR	72
711- 161- 220	TOOL POST SQ TOOL BK	72
711- 161- 322	TOOL POST SQ TOOL BK	72

NUMERICAL INDEX

Tool No.	Description	Page
711- 162- 100	UNIV TOOL POST SQ TOOL	72
711- 163- 100	TOOL HOLDER VERT SLIDE	74
711- 165- 100	KNEE TOOL	76
711- 165- 120	KNEE TOOL	76
711- 165- 122	KNEE TOOL	76
711- 165- 123	KNEE TOOL	76
711- 172- 120	CENTER & FACING TOOL	78
711- 172- 200	CENTER & FACING TOOL	78
711- 172- 222	CENTER & FACING TOOL	78
711- 175- 300	POINT TOOL W/BACK REST	80
711- 175- 400	POINT TOOL W/BACK REST	80
711- 180- 122	POINTING TOOL	82
711- 183- 122	TREPANNING TOOL	84
711- 185- 123	ADJUST KNURL HOLDER	86
711- 185- 200	ADJUST KNURL HOLDER	86
711- 185- 220	ADJUST KNURL HOLDER	86
711- 185- 322	ADJUST KNURL HOLDER	86
711- 190- 100	SIDE KNURL HOLDER	88
711- 190- 120	SIDE KNURL HOLDER	88
711- 190- 222	SIDE KNURL HOLDER	88
711- 210- 100	KNURL SWING TOOL	90
711- 211- 222	SLIDE TOOL KNURL HEAD	44
711- 220- 200	RECESS SWING TOOL	92
711- 220- 220	RECESS SWING TOOL	92
711- 220- 222	RECESS SWING TOOL	92
711- 221- 122	RECESSING HEAD	44
711- 225- 100	RECESSING TOOL	96
711- 225- 120	RECESSING TOOL	96
711- 225- 122	RECESSING TOOL	96
711- 230- 100	V BACK REST	92
711- 234- 100	ROLL BACK REST	98
711- 234- 120	ROLL BACK REST	98
711- 234- 122	ROLL BACK REST	98
711- 235- 100	V-BACK REST-TURRET	98
711- 235- 120	V-BACK REST-TURRET	98
711- 235- 122	V-BACK REST-TURRET	98
711- 236- 300	REVOLVING STOCK STOP	105
711- 236- 320	REVOLVING STOCK STOP	105
711- 236- 322	REVOLVING STOCK STOP	105
711- 236- 400	REVOLVING STOCK STOP	105
711- 236- 522	REVOLVING STOCK STOP	105
711- 238- 100	SOLID STOCK STOP	105
711- 238- 120	SOLID STOCK STOP	105
711- 238- 200	SOLID STOCK STOP	105
711- 238- 300	SOLID STOCK STOP	105
711- 238- 320	SOLID STOCK STOP	105
711- 238- 400	SOLID STOCK STOP	105
711- 238- 420	SOLID STOCK STOP	105
711- 238- 422	SOLID STOCK STOP	105
711- 238- 520	SOLID STOCK STOP	105
711- 238- 522	SOLID STOCK STOP	105
711- 240- 100	FIXED GUIDE RH	94
711- 240- 120	FIXED GUIDE RH	94
711- 240- 122	FIXED GUIDE RH	94
711- 241- 100	FIXED GUIDE LH	94
711- 241- 120	FIXED GUIDE LH	94
711- 241- 122	FIXED GUIDE LH	94
711- 245- 100	ADJUST GUIDE RH	94
711- 245- 120	ADJUST GUIDE RH	94
711- 245- 122	ADJUST GUIDE RH	94
711- 246- 100	ADJUST GUIDE LH	94
711- 246- 122	ADJUST GUIDE LH	94
711- 246- 222	ADJUST GUIDE LH	94
711- 250- 124	BRAKE SPLINED SHAFT	107
711- 250- 622	BRAKE SPLINED SHAFT	107
711- 255- 100	ADJUST CAM HOLDER THIN	110
711- 255- 120	ADJUST CAM HOLDER THIN	110
711- 255- 222	ADJUST CAM HOLDER THIN	110
711- 256- 100	ADJUST CAM HOLDER THICK	110
711- 256- 120	ADJUST CAM HOLDER THICK	110
711- 256- 222	ADJUST CAM HOLDER THICK	110
711- 257- 124	ADJUST CAM HOLDER NO4	110
711- 260- 120	TOOL ADAPTER 3/4-5/8	100
711- 260- 122	TOOL ADAPTER 1 5/8	100
711- 260- 222	TOOL ADAPTER 1 3/4	100
711- 261- 120	BUSHING ADAPTER 3/4-5/8	100
711- 261- 122	BUSHING ADAPTER 1-5/8	100
711- 261- 123	BUSHING ADAPTER 1-1/4	100
711- 261- 222	BUSHING ADAPTER 1 3/4	100
711- 350- 100	CAM BLANK 4 1/2 IN	109
711- 350- 120	CAM BLANK 6 IN	109
711- 350- 122	CAM BLANK 7 IN	109
711- 355- 100	CAM BLANK 5 IN	109
711- 355- 120	CAM BLANK 6 1/2 IN	109
711- 355- 122	CAM BLANK 8 IN	109
711- 355- 220	CAM BLANK 7 IN	109
711- 355- 222	CAM BLANK 9 IN	109
711- 355- 300	CAM BLANK 5 1/2 IN	109
711- 355- 322	CAM BLANK 10 IN	109
711- 356- 122	CAM BLANK 4-1/2 IN	109
711- 360- 122	CAM BLANK 6 IN	109
711- 360- 124	CAM BLANK 8 1/2 IN	109
711- 360- 222	CAM BLANK 8 IN	109
711- 365- 100	CAM TEMPLATE	111
711- 365- 120	CAM TEMPLATE	111
711- 365- 122	CAM TEMPLATE	111
711- 365- 200	CAM TEMPLATE	111
711- 365- 222	CAM TEMPLATE	111
711- 365- 322	CAM TEMPLATE	111
711- 365- 324	CAM TEMPLATE	111
711- 365- 400	CAM TEMPLATE	111
711- 365- 422	CAM TEMPLATE	111
711- 365- 500	CAM TEMPLATE	111
711- 365- 522	CAM TEMPLATE	111
711- 365- 622	CAM TEMPLATE	111
711- 370- 200	LEVER TEMPLATE	111
711- 370- 222	LEVER TEMPLATE	111

Tool No.	Description	Page
711- 371- 110	STOCK STOP ADJUSTABLE	106
711- 371- 121	STOCK STOP ADJUSTABLE	106
711- 372- 110	STOCK STOP SPRING EJECT	106
711- 372- 111	STOCK STOP SPRING EJECT	106
711- 372- 122	STOCK STOP SPRING EJECT	106
711- 373- 100	BURNISHING TOOL	104
711- 373- 120	BURNISHING TOOL	104
711- 373- 122	BURNISHING TOOL	104
711-1002-100 to 711-1036-126	FEED TUBE BUSHINGS	30
711- 1505- 100	PLAIN HOLLOW MILL 5/64	**
711- 1506- 100	PLAIN HOLLOW MILL 3/32	**
711- 1509- 120	PLAIN HOLLOW MILL 9/64	**
711- 1510- 100	PLAIN HOLLOW MILL 5/32	**
711- 1511- 100	PLAIN HOLLOW MILL 11/64	**
711- 1513- 100	PLAIN HOLLOW MILL 13/64	**
711- 1515- 120	PLAIN HOLLOW MILL 15/64	**
711- 1540- 222	PLAIN HOLLOW MILL 5/8	**
711- 3000- 100	BLADES ADJUST H MILL	103
711- 3000- 120	BLADES ADJUST H MILL	103
711-8064-100 to 711-8080-623	KNURLS	118-122
711-94071	BLADE 3/4 1 6	116
711-94072	BLADE 3/16 1/4 1-1/4	116
711-94073	BLADE 3/16 3/8 1-3/4	116
711-94074	BLADE 1/4 1/4 2-1/2	116
711-94075	BLADE 1/4 5/16 1-5/8	116
711-94076	BLADE 1/4 3/8 3	116
711-94077	BLADE 1/4 7/16 1-3/4	116
711-94078	BLADE 1/4 1/2 4	116
711-94079	BLADE 1/4 3/4 2-1/2	116
711-94080	BLADE 5/16 5/16 2-1/2	116
711-94081	BLADE 5/16 3/8 1-3/4	116
711-94082	BLADE 5/16 7/16 3-1/2	116
711-94083	BLADE 3/8 3/8 3	116
711-94084	BLADE 3/8 7/16 2-1/2	116
711-94085	BLADE 3/8 1/2 4	116
711-94086	BLADE 7/16 7/16 3-1/2	116
711-94087	BLADE 7/16 1/2 1-3/4	116
711-94088	BLADE 1/2 1/2 4	116
711-94089	BLADE 1/2 5/8 4-1/2	116
711-94090	BLADE 1/2 3/4 5	116
711-94091	BLADE 3/4 3/4 5	116
711-94092	BLADE 1/2 1/2 2-3/4	116
711-94093	BLADE 7/16 7/16 2-1/8	116
711-94500	RECESS BLADE .140 PKG 4	96
711-94501	RECESS BLADE .190 PKG 4	96
711-94502	RECESS BLADE .240 PKG 4	96
711-94503	RECESS BLADE .220 PKG 4	96
711-94504	RECESS BLADE .260 PKG 4	96
711-94505	RECESS BLADE .300 PKG 4	96
711-94506	RECESS BLADE .240 PKG 4	96
711-94507	RECESS BLADE .300 PKG 4	96
711-94508	RECESS BLADE .360 PKG 4	96
711-94509	RECESS BLADE .270 PKG 4	96
711-94510	RECESS BLADE .330 PKG 4	96
711-94511	RECESS BLADE .400 PKG 4	96
711-94600	BORING BLADE .125 PKG 4	66
711-94601	BORING BLADE .156 PKG 4	66
711-94602	BORING BLADE .187 PKG 4	66
711-94603	BORING BLADE .250 PKG 4	66
711-94604	BORING BLADE .230 PKG 4	66
711-94605	BORING BLADE .312 PKG 4	66
711-94606	BORING BLADE .375 PKG 4	66
711-94607	BORING BLADE .355 PKG 4	66
711-94608	BORING BLADE .437 PKG 4	66
711-94609	BORING BLADE .500 PKG 4	66
712-25-1125	ADJUST HOLLOW MILL	102
712-65-1150-1	ADJUST TOOL HOLDER	50
712-65-1175	ADJUST TOOL HOLDER	50
712-65-1200-1	ADJUST TOOL HOLDER	50
712-67-1125	FLOATING REAMER HOLDER	54
712-67-1150	FLOATING REAMER HOLDER	54
712-67-1200	FLOATING REAMER HOLDER	54
712-105-1125	RELEASING TAP HOLDER	62
712-105-1150	RELEASING TAP HOLDER	62
712-105-1175	RELEASING TAP HOLDER	62
712-105-1200	RELEASING TAP HOLDER	62
712-185-1125	ADJUST KNURL HOLDER	86
712-185-1150	ADJUST KNURL HOLDER	86
712-185-1175	ADJUST KNURL HOLDER	86
712-260-1125	ADAPTER	100
712-260-1150	ADAPTER	100
712-260-1175	ADAPTER	100
783-1-301 to 783-1-202	PUBLICATIONS	123

** *Not shown in catalog.*

COLLET AND FEED FINGER IDENTIFICATION

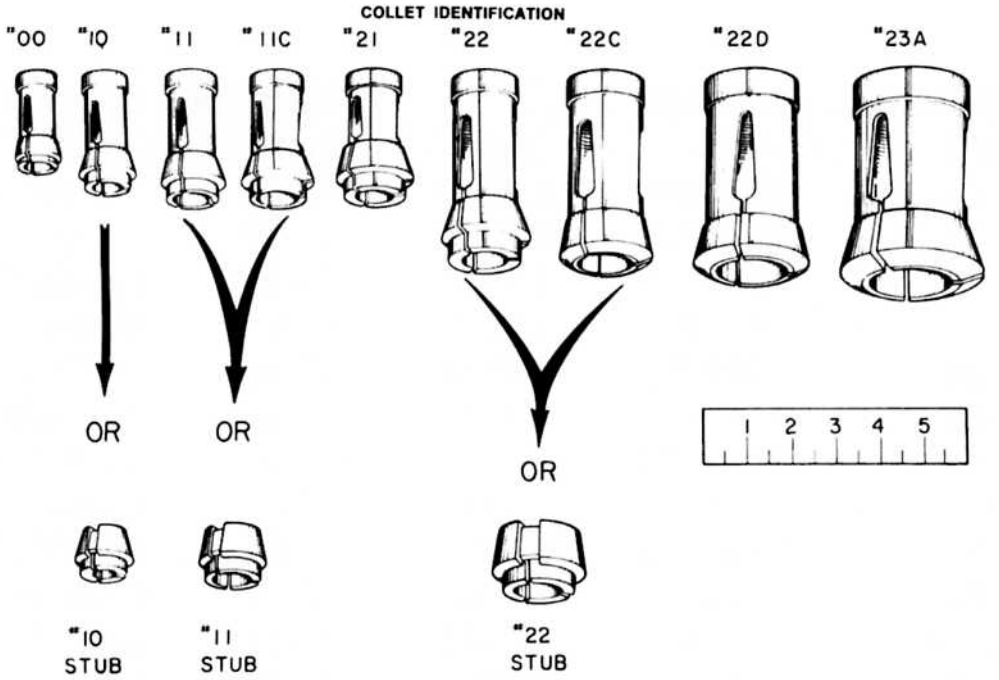

FEED FINGER IDENTIFICATION

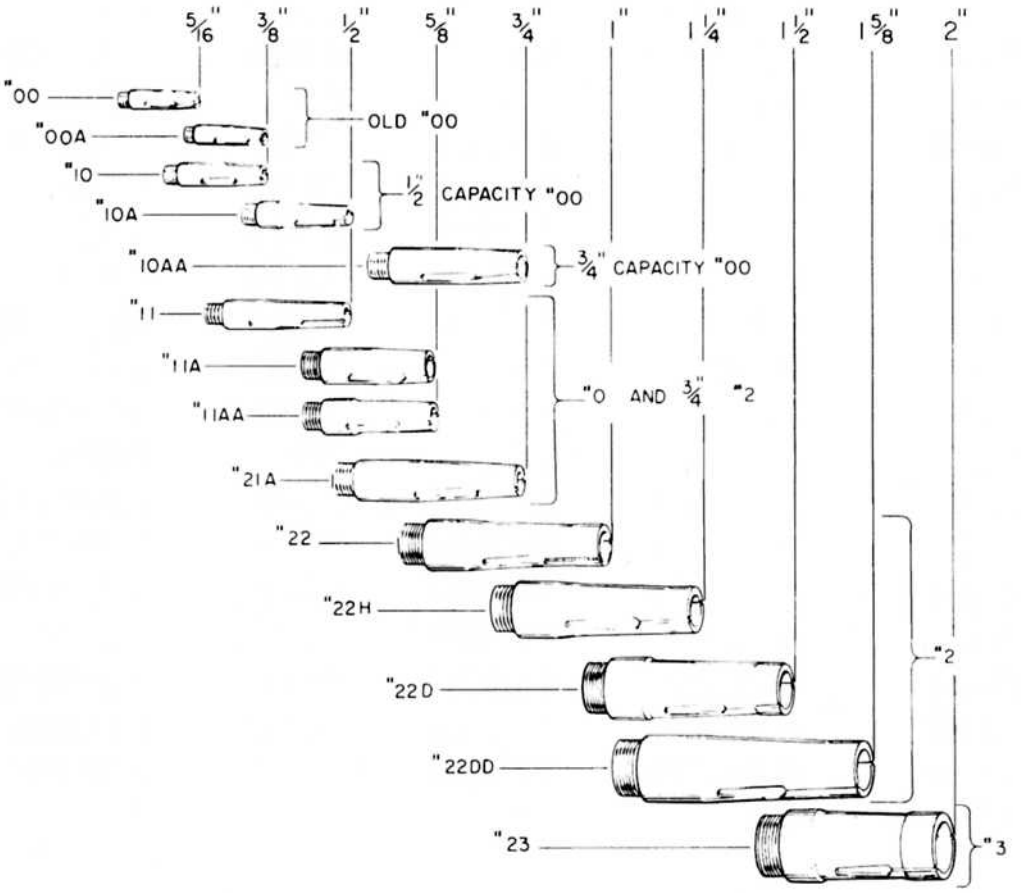

DECIMAL EQUIVALENTS

Fractional inch	Decimal inch	mm
1/64	0.015625	0.3969
1/32	0.03125	0.7938
3/64	0.046875	1.1906
1/16	0.0625	1.5875
5/64	0.078125	1.9844
3/32	0.09375	2.3813
7/64	0.109375	2.7781
1/8	0.125	3.175
9/64	0.140625	3.5719
5/32	0.15625	3.9688
11/64	0.171875	4.3656
3/16	0.1875	4.7625
13/64	0.203125	5.1594
7/32	0.21875	5.5563
15/64	0.234375	5.9531
1/4	0.25	6.35
17/64	0.265625	6.7469
9/32	0.28125	7.1438
19/64	0.296875	7.5406
5/16	0.3125	7.9375
21/64	0.328125	8.3344
11/32	0.34375	8.7313
23/64	0.359375	9.1281
3/8	0.375	9.525
25/64	0.390625	9.9219
13/32	0.40625	10.3188
27/64	0.421875	10.7156
7/16	0.4375	11.1125
29/64	0.453125	11.5094
15/32	0.46875	11.9063
31/64	0.484375	12.3031
1/2	0.5	12.7

Fractional inch	Decimal inch	mm
33/64	0.515625	13.0969
17/32	0.53125	13.4938
35/64	0.546875	13.8906
9/16	0.5625	14.2875
37/64	0.578125	14.6844
19/32	0.59375	15.0813
39/64	0.609375	15.4781
5/8	0.625	15.875
41/64	0.640625	16.2719
21/32	0.65625	16.6688
43/64	0.671875	17.0656
11/16	0.6875	17.4625
45/64	0.703125	17.8594
23/32	0.71875	18.2563
47/64	0.734375	18.6531
3/4	0.75	19.05
49/64	0.765625	19.4469
25/32	0.78125	19.8438
51/64	0.796875	20.2406
13/16	0.8125	20.6375
53/64	0.828125	21.0344
27/32	0.84375	21.4313
55/64	0.859375	21.8281
7/8	0.875	22.225
57/64	0.890625	22.6219
29/32	0.90625	23.0188
59/64	0.921875	23.4156
15/16	0.9375	23.8125
61/64	0.953125	24.2094
31/32	0.96875	24.6063
63/64	0.984375	25.0031
1	1	25.4

B&S

HEXAGON AND SQUARES DIMENSIONS ACROSS CORNERS

Across Flats	Across Corners Hex	Across Corners Square	Across Flats	Across Corners Hex	Across Corners Square
1/16"	.072"	.088"	1-1/16"	1.227"	1.502"
1/8	.144	.177	1-1/8	1.299	1.591
3/16	.216	.265	1-3/16	1.372	1.679
1/4	.289	.354	1-1/4	1.444	1.768
5/16	.361	.442	1-5/16	1.516	1.856
3/8	.433	.530	1-3/8	1.588	1.944
7/16	.505	.619	1-7/16	1.660	2.033
1/2	.577	.707	1-1/2	1.732	2.121
9/16	.650	.795	1-9/16	1.805	2.209
5/8	.722	.884	1-5/8	1.877	2.298
11/16	.794	.972	1-11/16	1.949	2.386
3/4	.866	1.061	1-3/4	2.021	2.475
13/16	.938	1.149	1-13/16	2.093	2.563
7/8	1.011	1.237	1-7/8	2.166	2.651
15/16	1.083	1.326	1-15/16	2.238	2.740
1"	1.155	1.414	2"	2.310	2.828

Across corners of hex stock = across flats multiplied by 1.155
Across corners of square stock = across flats multiplied by 1.414

SLOTTING ATTACHMENT SPECIFICATIONS

CAPACITIES

Max. Size of Work		Size of Saw	
5/16 Dia.	1-1/2 Long	1-3/4 Dia.	5/8 Hole

SPEEDS

Cutter Speed	Motor Speed	Timing Pulley	Pulley Symbols & Teeth			
			Motor	Teeth	Driveshaft	Teeth
262	3450	3.28 to 1	42-19375	14	42-19374	46
575	3450	1.5 to 1	42-17823	26	42-19372	39
862*	3450	1 to 1	42-17824	33	42-19392	33
1290	3450	1 to 1.5	42-19372	39	42-17823	26

CAMS FURNISHED

Advancing	Transfer	Cam Dia.	Cycle	Work Length
42-18540	42-18541	4-1/2"	5 to 100	Full Length

CAMS WHEN SPECIFIED

Advancing	Transfer	Cam Dia.	Cycle	Work Length
42-18526	42-18527	4-1/2	1 to 1-3/4	Up to 1/2"
42-18528	42-18529	4-1/2	1 to 1-3/4	Over 1/2"
42-18530	42-18531	5	1 to 1-3/4	Full Length
42-18532	42-18533	4-1/2	2 to 2-3/4	Full Length
42-18534	42-18535	5	2 to 2-3/4	Full Length
42-18536	42-18537	4-1/2	3 to 4-4/5	Full Length
42-18538	42-18539	5	3 to 4-4/5	Full Length
42-18542	42-18543	5	5 to 100	Full Length

Attachment Number 642-12-00-3

* When Specified

COLLET FINISHING INSTRUCTIONS

The following is the heat treating procedure for collet blanks:

1. Carburize 1620° - 1700°F for .025-.035 depth of case
2. Oil quench 1525° - 1575°F
3. Temper 350°F for 2 hours
4. Temper shank 45-49 Rockwell "C"
5. Wedge slots
6. Temper shank 43-46 Rockwell "C"

Slot width after hardening:

Burring Attachment .070/.080

#00 Round & Hex	5/64	#00 Square	1/16
#10 Round & Hex	3/32	#10 Square	3/32
#11 Round & Hex	1/8	#11 Square	3/32
#11C Round & Hex	1/8	#11C Square	3/32
#21 Round & Hex	3/32	#21 Square	3/32
#22 Round & Hex	5/32	#22 Square	1/8

CAM HEAT TREATING INSTRUCTIONS

The following is the heat treating procedure for cams:

1. Heat in cyanide to 1520°F for 1-1/2 hours
2. Brine quench
3. Straighten, if necessary, and sandblast

TOOL CLAMP BOLTS (HOOK BOLTS)

FRONT SLIDE

TOOL POST	MACHINES WHERE USED	MAX. DIA TOOL INCHES	MAX. WIDTH TOOL INCHES	SYMBOL # OF HOOK BOLTS	TOOL WIDTH USED	LENGTH UNDER HEAD	OVERALL LENGTH	STYLE HOOK BOLT
711-130-222	2-2G-3	3	2	211-13017	1-1/2 - 2	3-3/16	3-7/8	1
711-133-222	2(3/4")	2-1/4	1-1/4	211-13583	1/2 - 3/4	1-15/16	2-5/8	1
				211-13585	1 - 1-1/4	2-7/16	3-1/8	
711-135-100	00-00G	1-3/4	1	211-13554	3/8 - 1/2	1-5/16	1-13/16	2
				211-13555	3/4 - 1	1-3/4	2-1/4	
				211-13556	1/4	1-1/16	1-9/16	
711-135-100	00(3/4")	1-3/4	1	211-13588	1/4	1-3/32	1-9/16	4
				211-13589	3/8 - 1/2	1-11/32	1-13/16	
				211-13590	3/4 - 1	1-25/32	2-1/4	
711-135-120	0-0G	2-1/4	1-1/4	211-13568	3/8	1-3/8	2-1/8	2
				211-13569	1/2 - 3/4	1-3/4	2-1/2	
				211-13570	1 -1-1/4	2-1/8	2-7/8	
711-135-122	2-2G-3	3	1-1/2	211-13583	1/2 - 3/4	1-15/16	2-5/8	1
				211-13584	1-1/4-1-1/2	2-11/16	3-3/8	
				211-13585	1 - 1-1/4	2-9/16	3-1/8	
	00-00G			42-15161		1-1/2	2	6

BACK SLIDE

TOOL POST	MACHINES WHERE USED	MAX. DIA TOOL INCHES	MAX. WIDTH TOOL INCHES	SYMBOL # OF HOOK BOLTS	TOOL WIDTH USED	LENGTH UNDER HEAD	OVERALL LENGTH	STYLE HOOK BOLT
711-131-222	2-2G-3	3	2	211-13017	1-1/2 - 2	3-3/16	2-5/8	1
711-134-222	2(3/4")	2-1/4	1-1/4	211-13583	1/2 - 3/4	1-15/16	2-5/8	1
				211-13585	1 - 1-1/4	2-7/16	3-1/8	
711-136-100	00-00G	1-3/4	1/2	211-13660	1/4	1-1/16	1-9/16	3
				211-13661	3/8 - 1/2	1-5/16	1-13/16	
711-136-100	00(3/4")	1-3/4	1/2	211-13591	1/4	1-3/32	1-9/16	5
				211-13592	3/8 - 1/2	1-11/32	1-13/16	
711-136-120	0-0G	2-1/4	1-1/4	211-13671	3/8 - 1/2	1-3/8	2-1/8	3
				211-13672	3/4 - 1-1/4	2-1/8	2-7/8	
711-136-122	2-2G-3	3	1-1/2	211-13583	1/2 - 3/4	1-15/16	2-5/8	1
				211-13584	1-1/4-1-1/2	2-11/16	3-3/8	
				211-13585	1 - 1-1/4	2-9/16	3-1/8	
711-130-122	2G (worm adj.)			42-15214	2	3-7/16	4-1/8	2

STYLE 1 (FRONT OR BACK SLIDE)

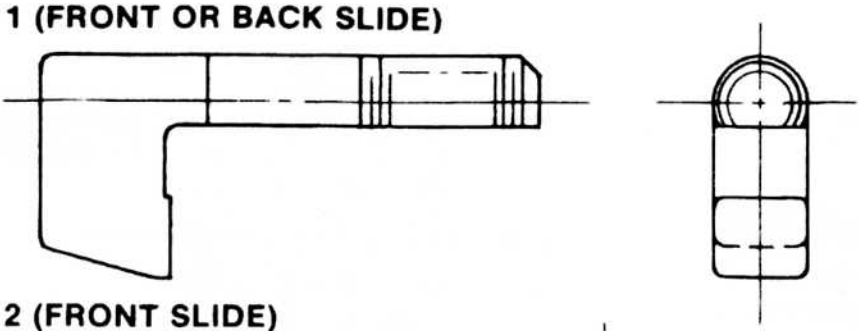

STYLE 2 (FRONT SLIDE)

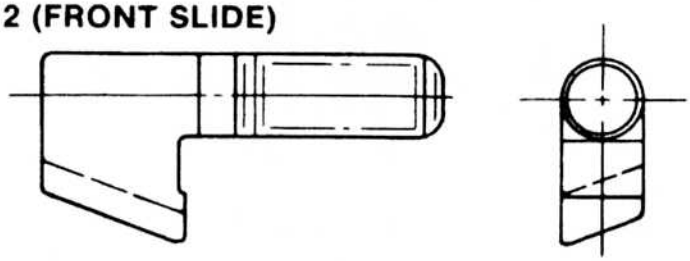

STYLE 3 (BACK SLIDE)

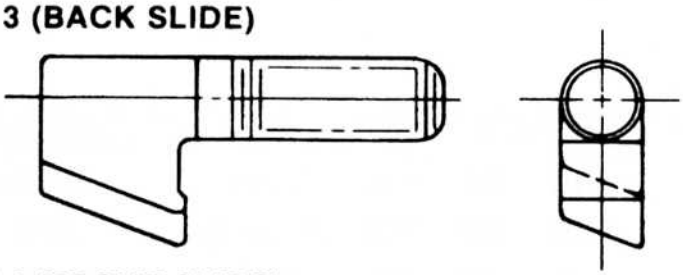

STYLE 4 (FRONT SLIDE)

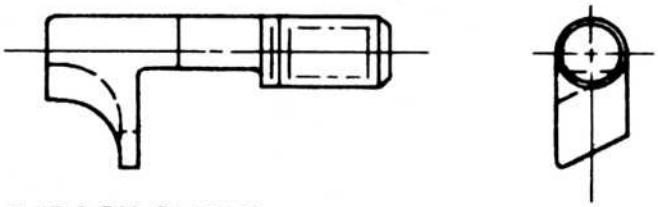

STYLE 5 (BACK SLIDE)

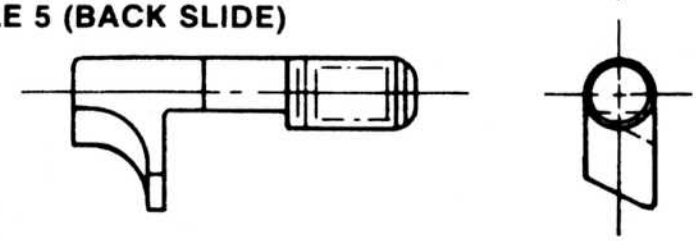

STYLE 6 (FRONT SLIDE)

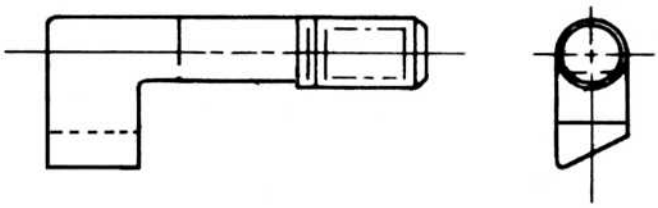

INSTRUCTIONS FOR SLOTTING BUSHINGS

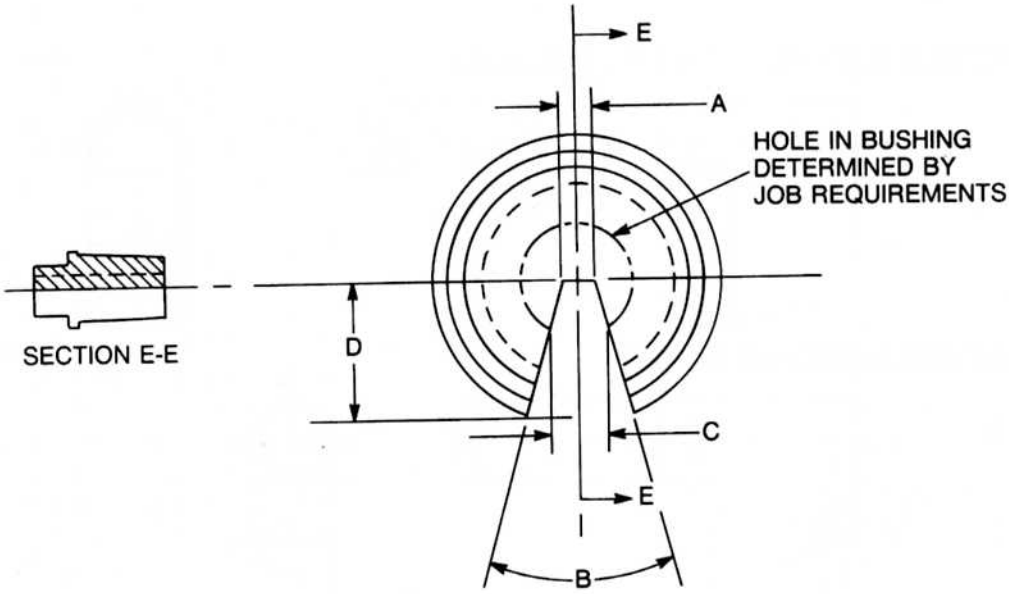

MACHINE	A	B	C	D	EJECTOR THICKNESS
#00	1/16	30°	1/16	Varies	.039/.045
#0	1/16	35°	3/32	in relation	.070
#2	1/16	35°	1/8	to "C"	.109